REVISIONS				
ZONE	LTR	DESCRIPTION	DATE	APPR.

FALCON

MSM8626
03-01-2013

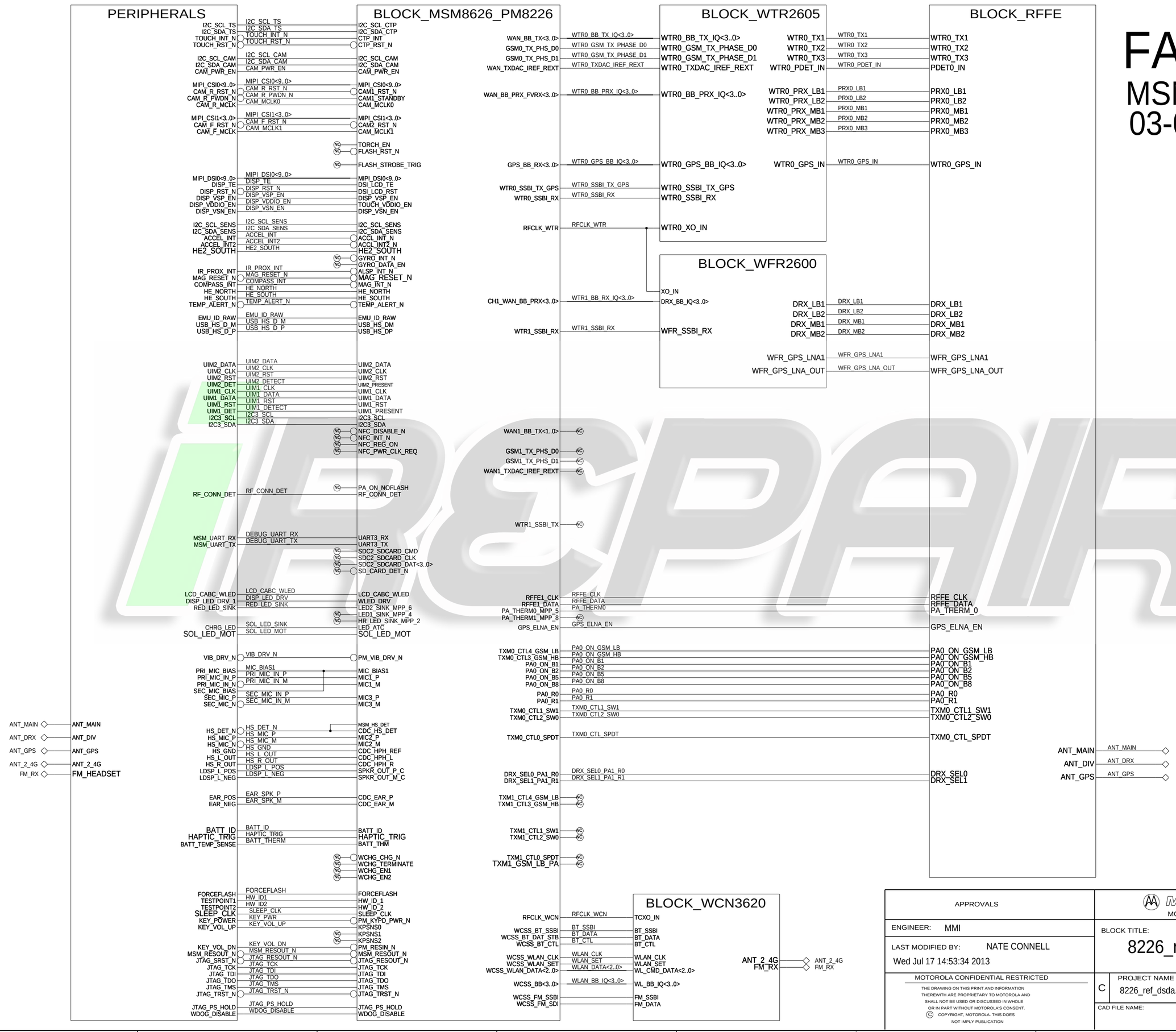

APPROVALS	
ENGINEER: MMI	
LAST MODIFIED BY: NATE CONNELL	
Wed Jul 17 14:53:34 2013	

MOTOROLA CONFIDENTIAL RESTRICTED
THE DRAWING ON THIS PRINT AND INFORMATION THEREWITH ARE PROPRIETARY TO MOTOROLA AND SHALL NOT BE USED OR DISCUSSED IN WHOLE OR IN PART WITHOUT MOTOROLA'S CONSENT.
© COPYRIGHT, MOTOROLA. THIS DOES NOT IMPLY PUBLICATION

MOTOROLA
MOBILE DEVICES

BLOCK TITLE: 8226_ref_dsda

C	PROJECT NAME: 8226_ref_dsda.cpm	REV: 01
	CAD FILE NAME:	PAGE 1 of 37

iRepair

DVX ME/SHIELDS

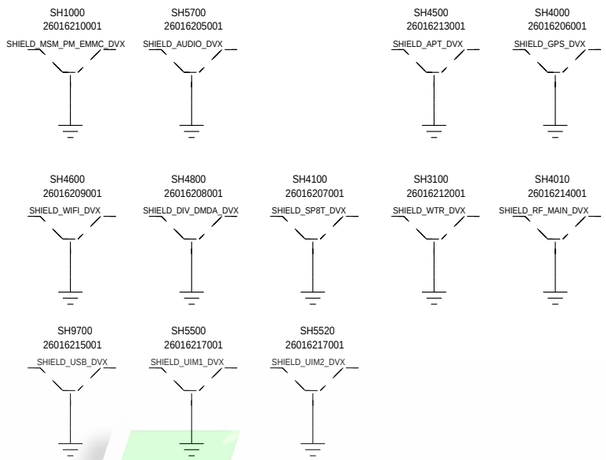

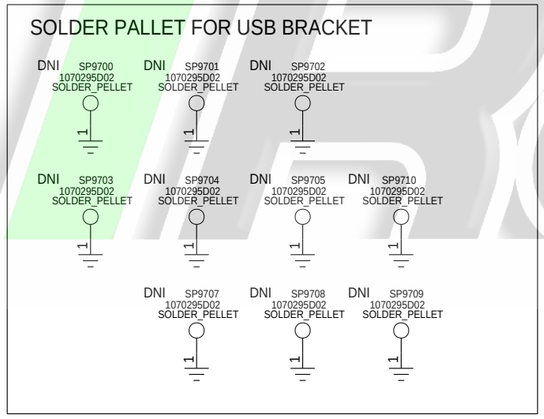

iRSPAIR

APPROVALS	MOTOROLA MOBILE DEVICES	
ENGINEER:	BLOCK TITLE: 8226_ref_dsda	
LAST MODIFIED BY: Fri Aug 30 15:05:06 2013		
MOTOROLA CONFIDENTIAL RESTRICTED	B	PROJECT NAME 8226_ref_dsda.cpm	REV 01
THE DRAWING ON THIS PRINT AND INFORMATION THEREWITH ARE PROPRIETARY TO MOTOROLA AND SHALL NOT BE USED OR DISCUSSED IN WHOLE OR IN PART WITHOUT MOTOROLA'S CONSENT. © COPYRIGHT, MOTOROLA. THIS DOES NOT IMPLY PUBLICATION	CAD FILE NAME:	PAGE 2 OF 37

POWER

REF:5000 - 5099

MICRO USB

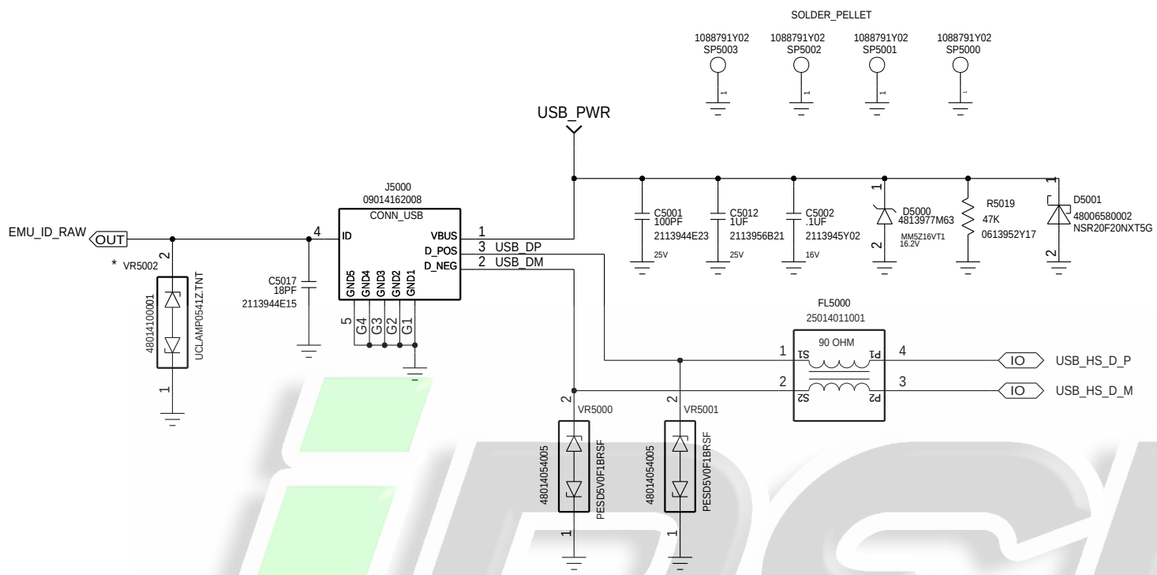

BATTERY BLOCK

REF:5200 - 5249

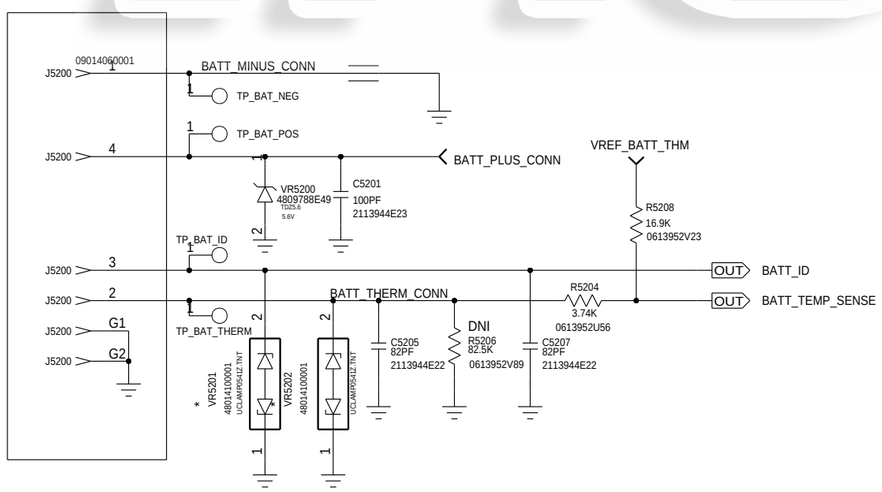

APPROVALS	MOTOROLA MOBILE DEVICES	
ENGINEER: RICH NG	BLOCK TITLE: peripherals	
LAST MODIFIED BY: NATE CONNELL Fri Aug 30 15:05:22 2013		
MOTOROLA CONFIDENTIAL RESTRICTED	B	PROJECT NAME 8226_ref_dsda.cpm / REV 01
	CAD FILE NAME:	PAGE 3 OF 37

THE DRAWING ON THIS PRINT AND INFORMATION THEREWITH ARE PROPRIETARY TO MOTOROLA AND SHALL NOT BE USED OR DISCUSSED IN WHOLE OR IN PART WITHOUT MOTOROLA'S CONSENT.
© COPYRIGHT, MOTOROLA. THIS DOES NOT IMPLY PUBLICATION

iRepair

LIGHTING

REF:5400-5419

WHITE NOTIFICATION LED + WHITE SOL LED

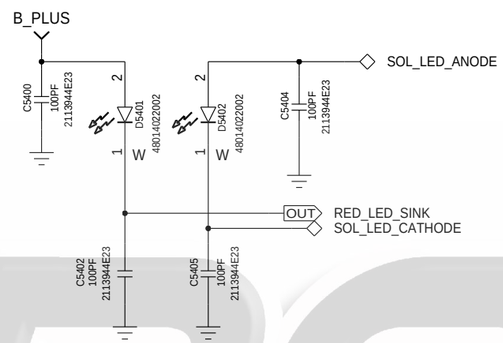

SOL LED DRIVE SELECTION

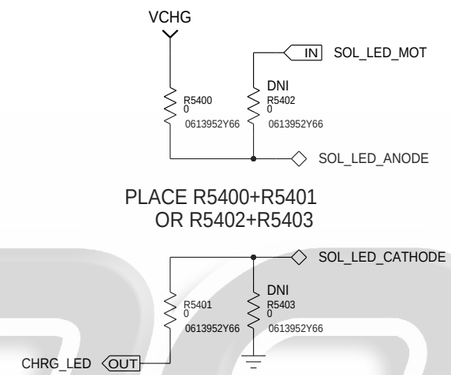

iREPAIR

APPROVALS	MOTOROLA MOBILE DEVICES
ENGINEER:	BLOCK TITLE: peripherals
LAST MODIFIED BY: NATE CONNELL Fri Aug 30 15:05:21 2013	
MOTOROLA CONFIDENTIAL RESTRICTED	B — PROJECT NAME: 8226_ref_dsda.cpm — REV: 01
THE DRAWING ON THIS PRINT AND INFORMATION THEREWITH ARE PROPRIETARY TO MOTOROLA AND SHALL NOT BE USED OR DISCUSSED IN WHOLE OR IN PART WITHOUT MOTOROLA'S CONSENT.	CAD FILE NAME:
© COPYRIGHT, MOTOROLA. THIS DOES NOT IMPLY PUBLICATION	PAGE 4 OF 37

AUDIO

REF: 5700-5799

PRIMARY MIC

REF: 5700-5709

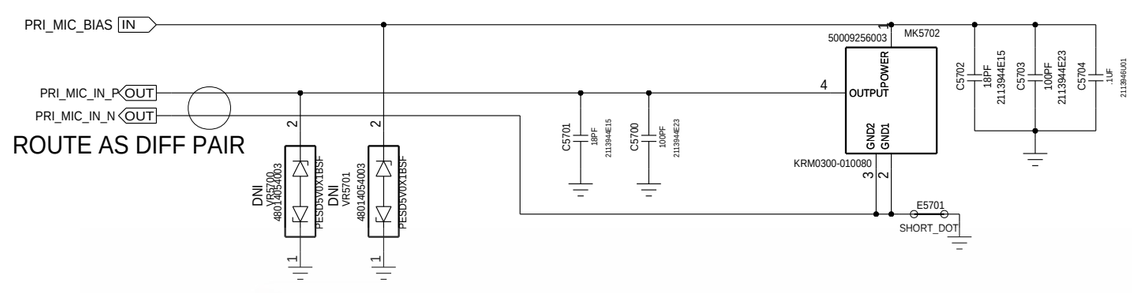

SECONDARY MIC (FLUENCE/ANC NOISE MIC)

REF:5750-5759

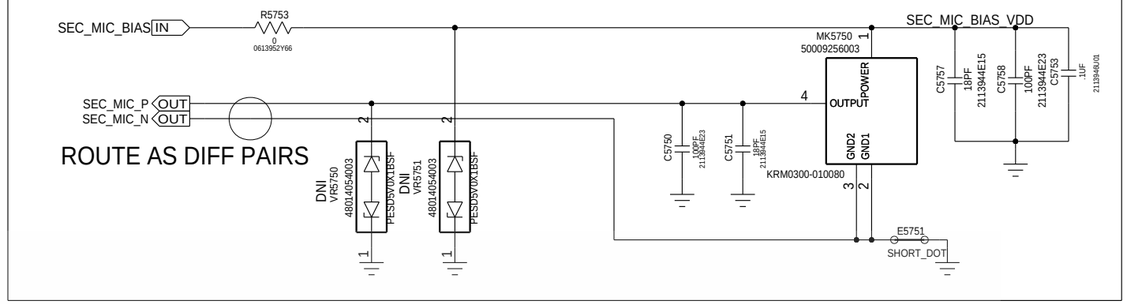

ROTARY VIBRATOR

REF DES 5100-5119

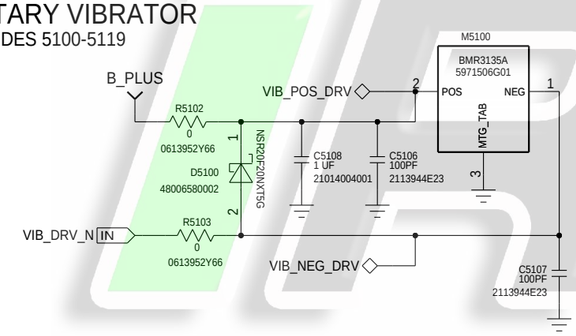

LOUDSPEAKER LEFT (TOP)

REF:5780-5789

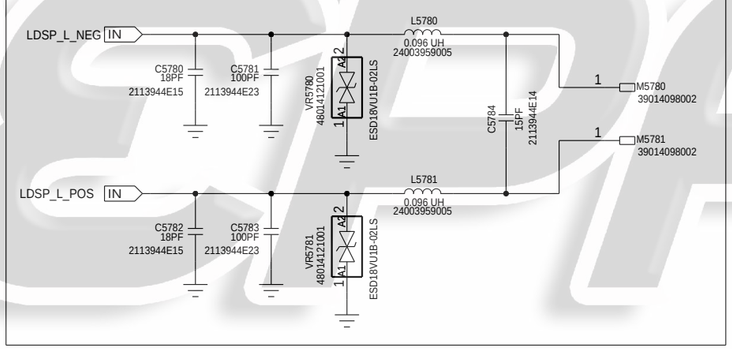

EAR PIECE

REF:5790-5799

NOTE: TP5700 & TP5701 ARE USED TO CREATE MIRROR PADS FOR SPEAKER

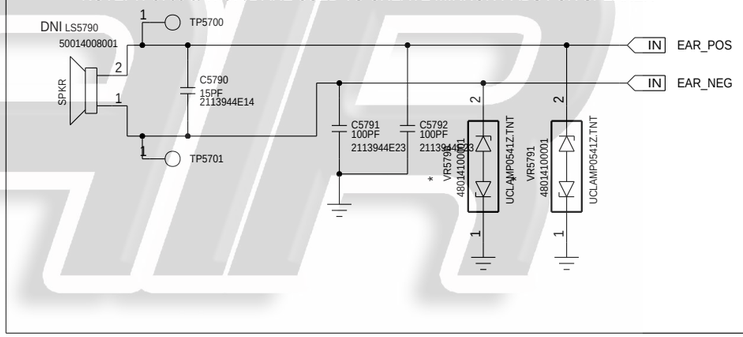

VIBRATOR DRIVER

I2C ADDR: 0X66

DNP BY DEFAULT

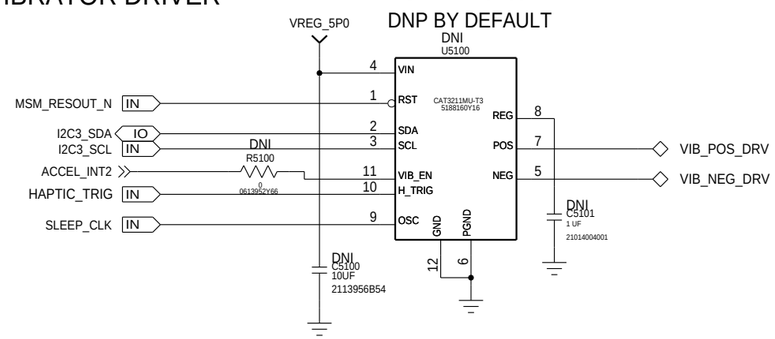

APPROVALS	MOTOROLA MOBILE DEVICES	
ENGINEER: DENNIS BUDNICK	BLOCK TITLE: peripherals	
LAST MODIFIED BY: NATE CONNELL Fri Aug 30 15:05:10 2013		
MOTOROLA CONFIDENTIAL RESTRICTED	B	PROJECT NAME 8226_ref_dsda.cpm — REV 01
	CAD FILE NAME:	PAGE 5 OF 37

THE DRAWING ON THIS PRINT AND INFORMATION THEREWITH ARE PROPRIETARY TO MOTOROLA AND SHALL NOT BE USED OR DISCUSSED IN WHOLE OR IN PART WITHOUT MOTOROLA'S CONSENT.
© COPYRIGHT, MOTOROLA. THIS DOES NOT IMPLY PUBLICATION

3.5MM HEADSET

UNIVERSAL HEADSET
REF:4900-4949

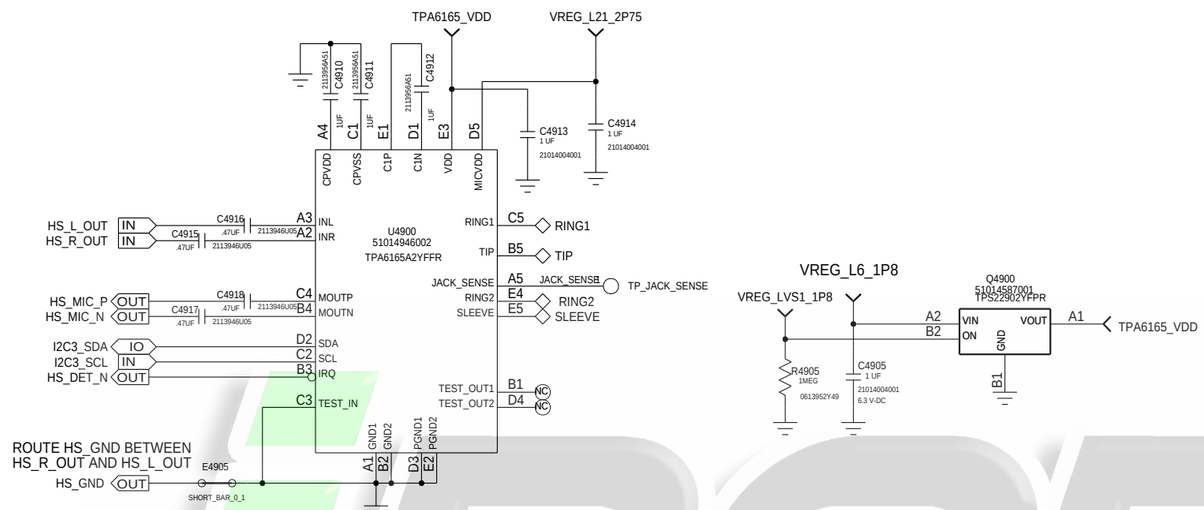

UART OVER HEADSET
REF:4950-4999
(DNI FOR PRODUCTION)

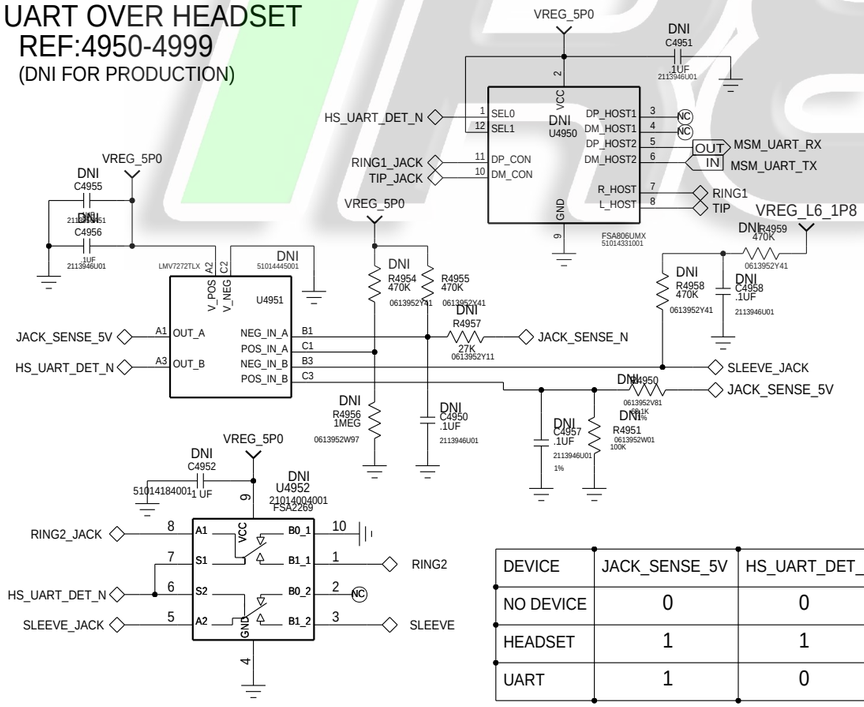

DEVICE	JACK_SENSE_5V	HS_UART_DET_N	STATE	
NO DEVICE	0	0	UART OUTPUT	SLEEVE - NC RING2 - GND
HEADSET	1	1	AUDIO MODE	RING2 - TPA6165 SLEEVE - TPA6165
UART	1	0	UART OUTPUT	SLEEVE - NC RING2 - GND

3.5MM HSJ
REF:4900-4949

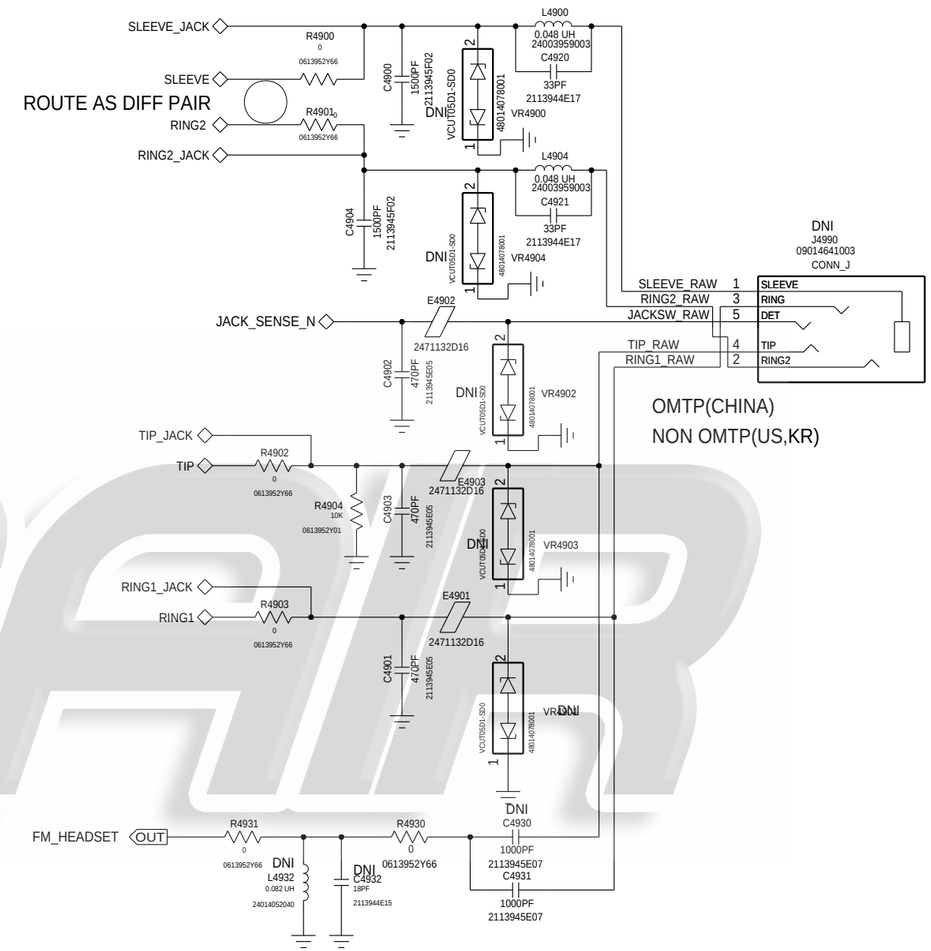

APPROVALS	MOTOROLA MOBILE DEVICES
ENGINEER: MATT MOTTIER	BLOCK TITLE: peripherals
LAST MODIFIED BY: NATE CONNELL Fri Aug 30 15:05:20 2013	
MOTOROLA CONFIDENTIAL RESTRICTED	B — PROJECT NAME: 8226_ref_dsda.cpm — REV: 01
THE DRAWING ON THIS PRINT AND INFORMATION THEREWITH ARE PROPRIETARY TO MOTOROLA AND SHALL NOT BE USED OR DISCUSSED IN WHOLE OR IN PART WITHOUT MOTOROLA'S CONSENT.	CAD FILE NAME:
© COPYRIGHT, MOTOROLA. THIS DOES NOT IMPLY PUBLICATION	PAGE 6 OF 37

REPAIR

SENSORS

REF:9700-9799

PROX SENSOR/ALS

I2C ADDR:0X39 0X3A

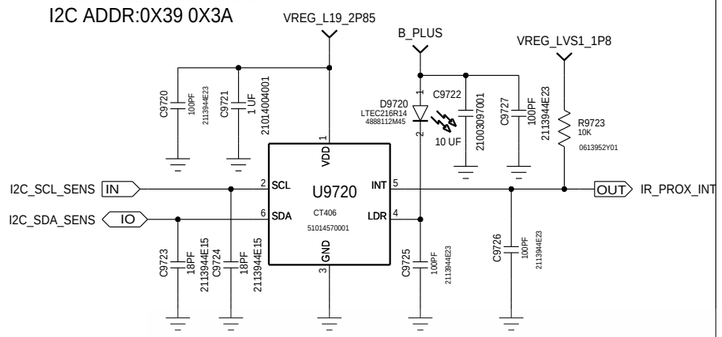

REF:9720-9729

BOARD TEMP SENSOR

I2C ADDR: 0X48

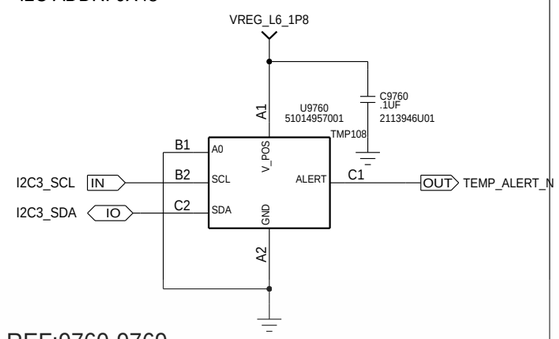

REF:9760-9769

HALL EFFECT

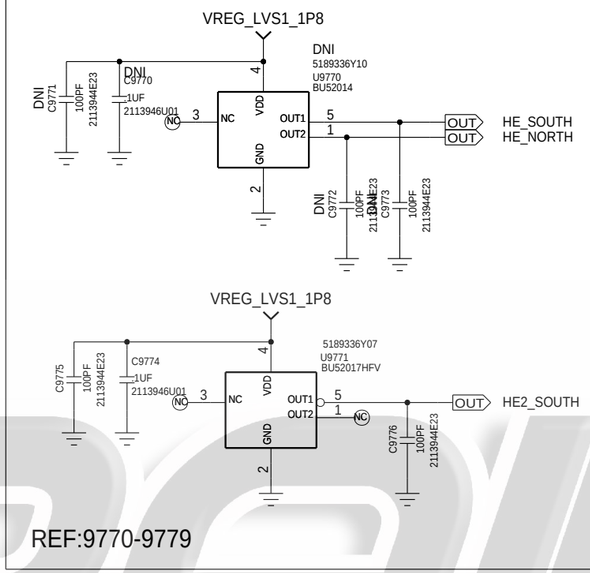

REF:9770-9779

MAGNETOMETER

I2C ADDR: 0X0C

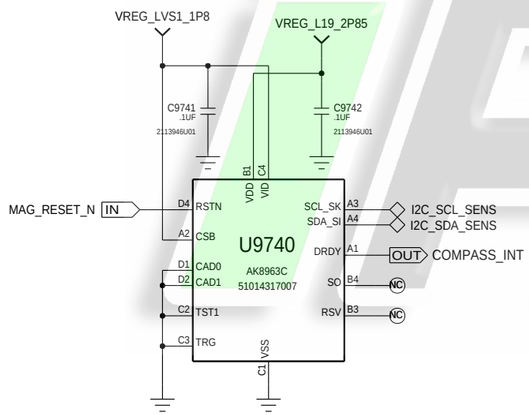

REF:9740-9749

ACCELEROMETER

I2C ADDR: 0X18 (ACCEL)

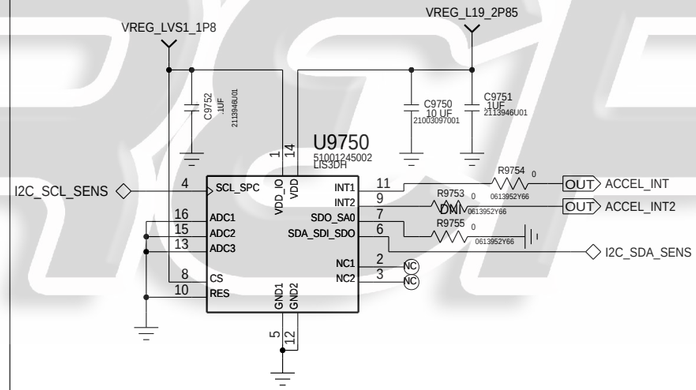

REF:9750-9759

ALL PRODUCTS MUST
FOLLOW BIGFOOT
PCB ORIENTATION

APPROVALS	MOTOROLA MOBILE DEVICES
ENGINEER: HUNG PHAM	BLOCK TITLE: peripherals
LAST MODIFIED BY: NATE CONNELL Fri Aug 30 15:05:12 2013	
MOTOROLA CONFIDENTIAL RESTRICTED	B — PROJECT NAME: 8226_ref_dsda.cpm — REV: 01
THE DRAWING ON THIS PRINT AND INFORMATION THEREWITH ARE PROPRIETARY TO MOTOROLA AND SHALL NOT BE USED OR DISCUSSED IN WHOLE OR IN PART WITHOUT MOTOROLA'S CONSENT. © COPYRIGHT, MOTOROLA. THIS DOES NOT IMPLY PUBLICATION	CAD FILE NAME:
	PAGE 7 OF 87

REPAIR

SIM AND SIDEKEYS

REF:5500-5599

UIM1

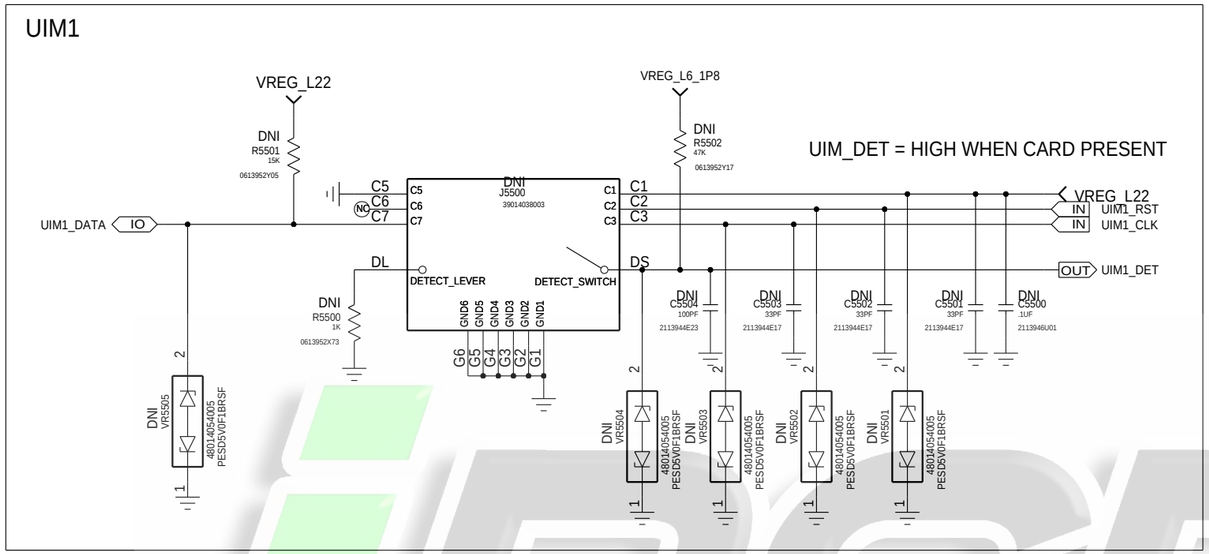

UIM2

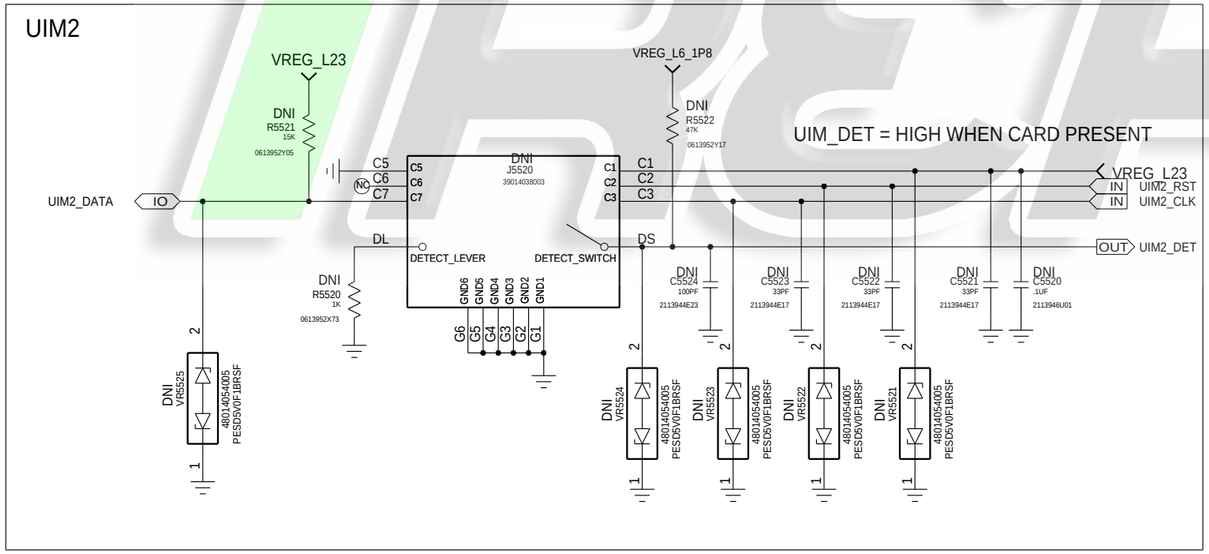

MECHANICAL KEYS

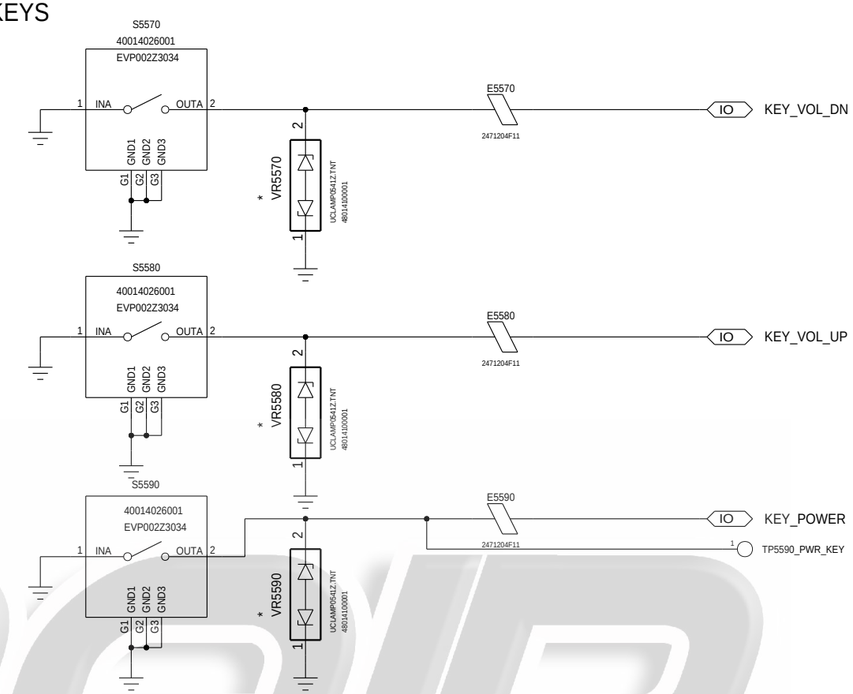

FORCE FLASH SUPPORT WITH VOL UP KEY

(DNI FOR PRODUCTION)

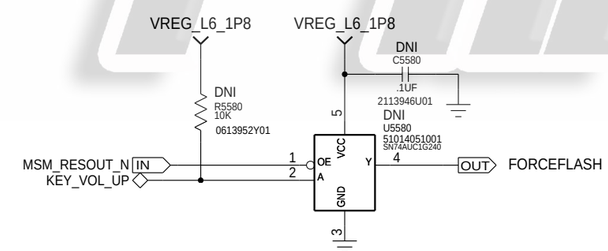

APPROVALS	MOTOROLA MOBILE DEVICES	
ENGINEER:	BLOCK TITLE: peripherals	
LAST MODIFIED BY: Fri Aug 30 15:05:14 2013		
MOTOROLA CONFIDENTIAL RESTRICTED	B	PROJECT NAME 8226_ref_dsda.cpm	REV 01
THE DRAWING ON THIS PRINT AND INFORMATION THEREWITH ARE PROPRIETARY TO MOTOROLA AND SHALL NOT BE USED OR DISCUSSED IN WHOLE OR IN PART WITHOUT MOTOROLA'S CONSENT.	CAD FILE NAME:	PAGE 8 OF 37

© COPYRIGHT, MOTOROLA. THIS DOES NOT IMPLY PUBLICATION

FRONT CAMERA

REF 5600-5649

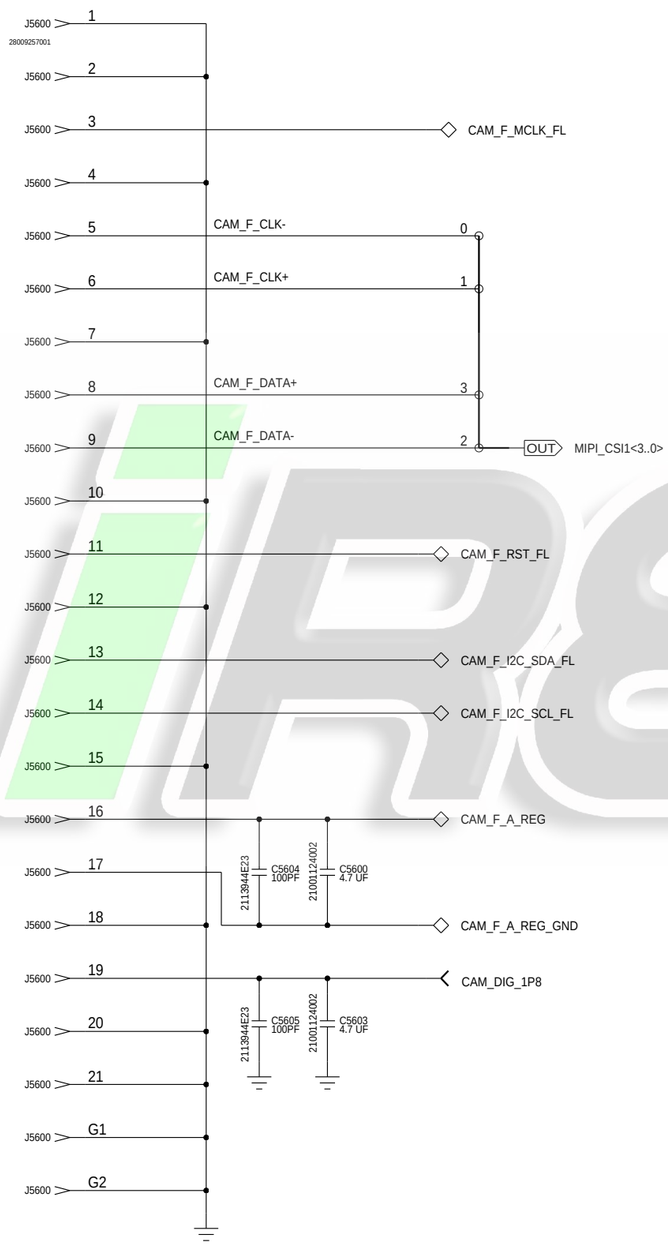

ANALOG LDO

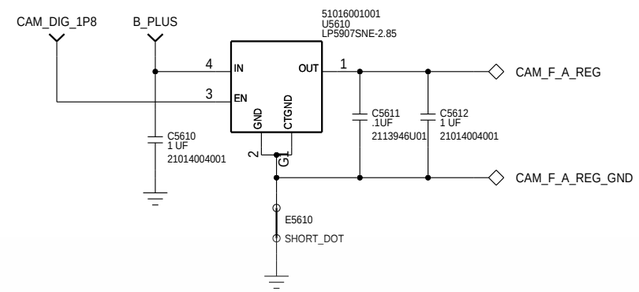

EMI/ESD FILTER

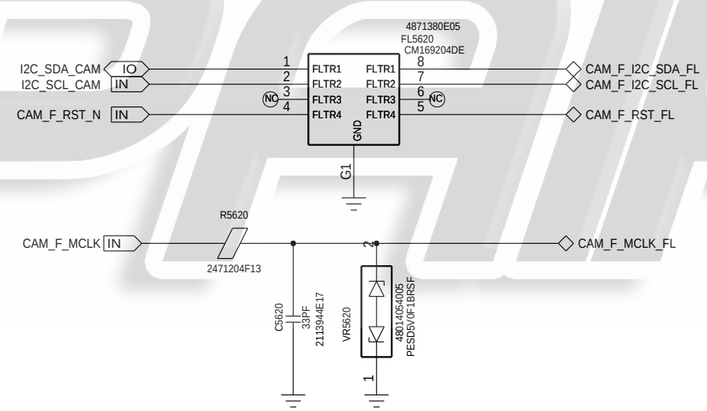

APPROVALS	MOTOROLA MOBILE DEVICES
ENGINEER: JOHN KRAMER	BLOCK TITLE: peripherals
LAST MODIFIED BY: NATE CONNELL Fri Aug 30 15:05:23 2013	
MOTOROLA CONFIDENTIAL RESTRICTED	B — PROJECT NAME: 8226_ref_dsda.cpm — REV: 01
	CAD FILE NAME: — PAGE 9 OF 37

THE DRAWING ON THIS PRINT AND INFORMATION THEREWITH ARE PROPRIETARY TO MOTOROLA AND SHALL NOT BE USED OR DISCUSSED IN WHOLE OR IN PART WITHOUT MOTOROLA'S CONSENT.
© COPYRIGHT, MOTOROLA. THIS DOES NOT IMPLY PUBLICATION

REAR CAMERA

REF:6100-6149

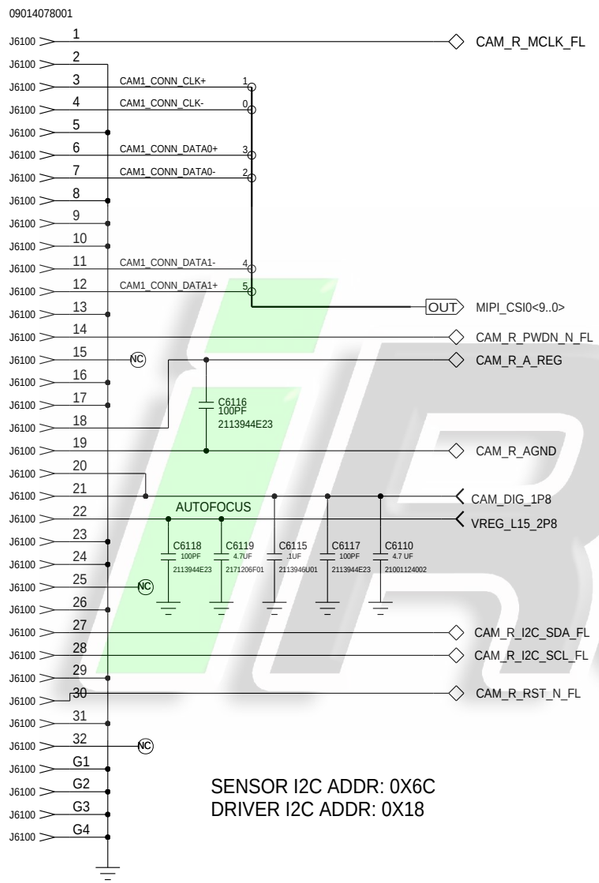

SENSOR I2C ADDR: 0X6C
DRIVER I2C ADDR: 0X18

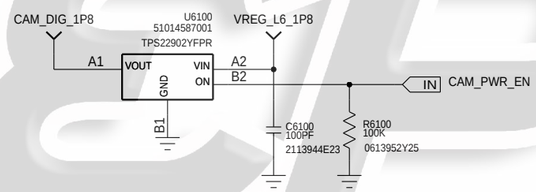

CAMERA FLASH CONTACTS

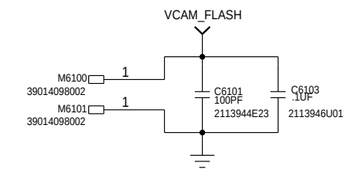

2.85V LDO - AVDD

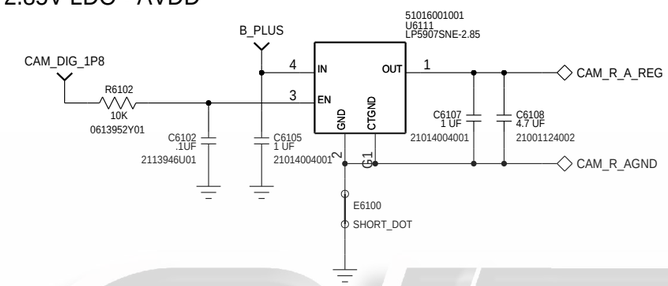

EMI/ESD FILTER

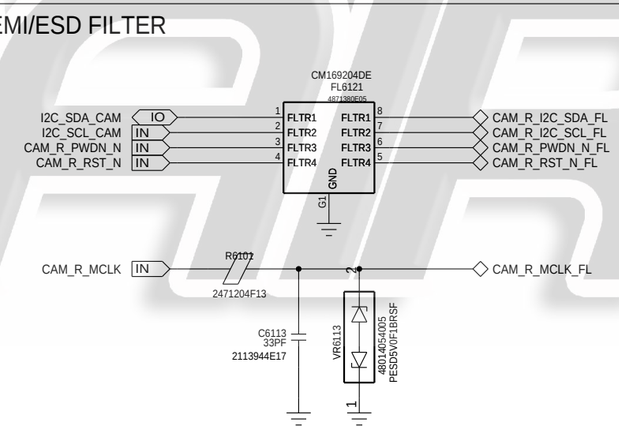

APPROVALS	MOTOROLA MOBILE DEVICES
ENGINEER: JOHN KRAMER	BLOCK TITLE: peripherals
LAST MODIFIED BY: NATE CONNELL Fri Aug 30 15:05:18 2013	
MOTOROLA CONFIDENTIAL RESTRICTED	B — PROJECT NAME: 8226_ref_dsda.cpm — REV: 01
	CAD FILE NAME: — PAGE 10 OF 37

THE DRAWING ON THIS PRINT AND INFORMATION THEREWITH ARE PROPRIETARY TO MOTOROLA AND SHALL NOT BE USED OR DISCUSSED IN WHOLE OR IN PART WITHOUT MOTOROLA'S CONSENT.
© COPYRIGHT, MOTOROLA. THIS DOES NOT IMPLY PUBLICATION

DISPLAY AND TOUCH

REF 5300-5349

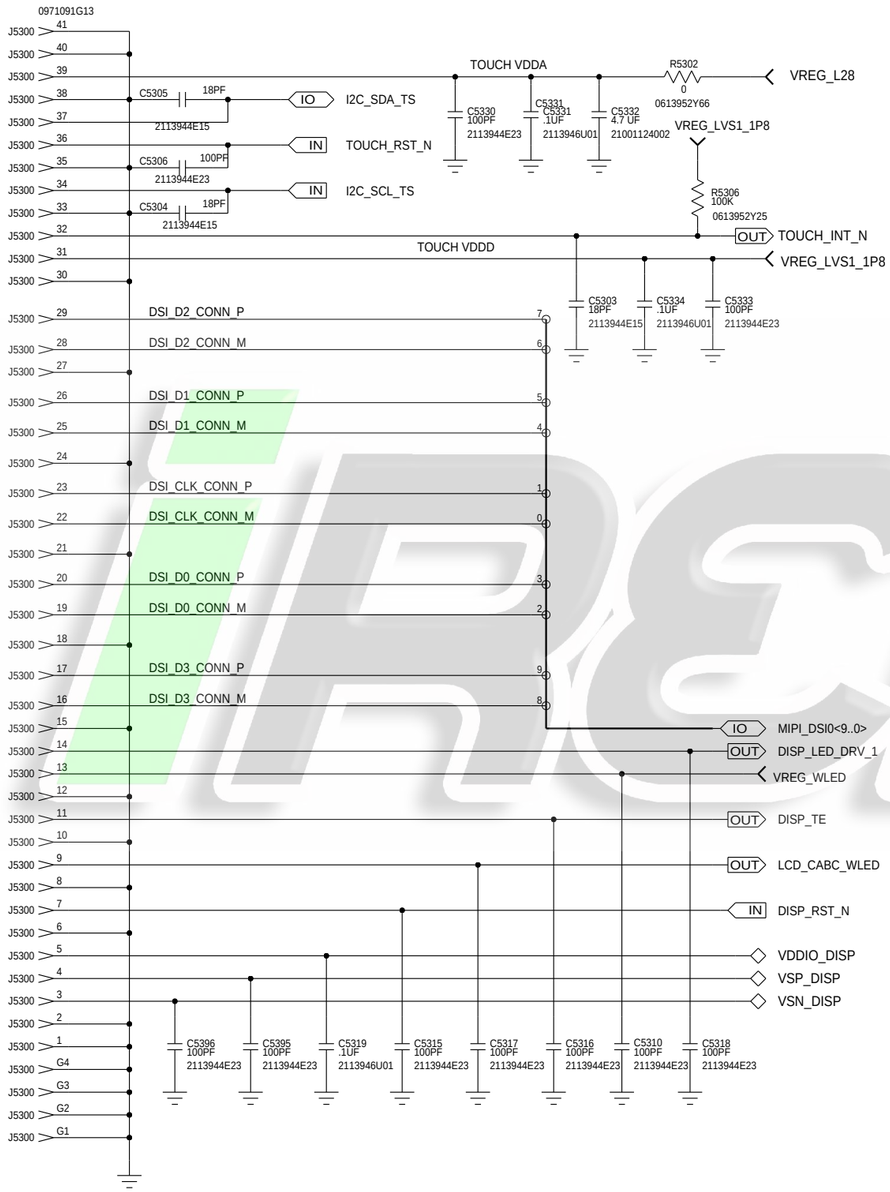

ANALOG SUPPLY

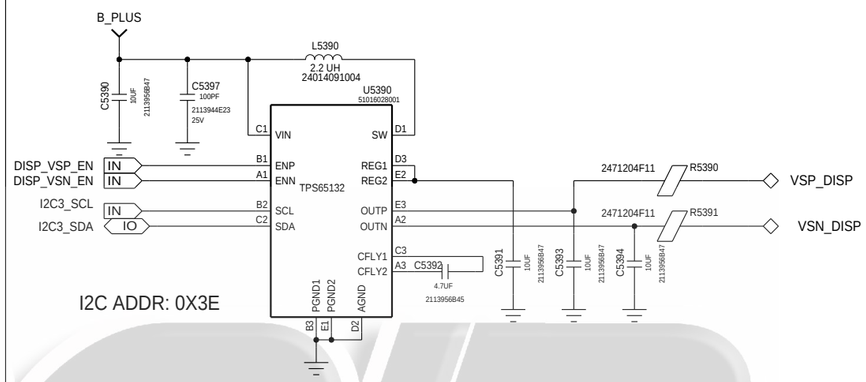

DIGITAL SUPPLY

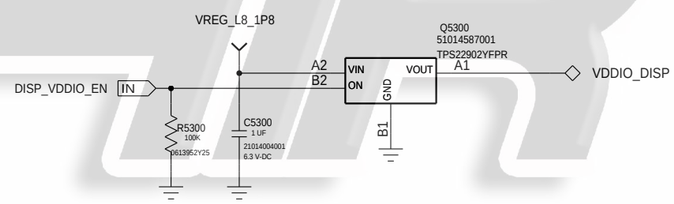

APPROVALS	MOTOROLA MOBILE DEVICES
ENGINEER: NATE CONNELL	BLOCK TITLE: peripherals
LAST MODIFIED BY: NATE CONNELL Fri Aug 30 15:05:16 2013	
MOTOROLA CONFIDENTIAL RESTRICTED	B — PROJECT NAME: 8226_ref_dsda.cpm — REV: 01
THE DRAWING ON THIS PRINT AND INFORMATION THEREWITH ARE PROPRIETARY TO MOTOROLA AND SHALL NOT BE USED OR DISCUSSED IN WHOLE OR IN PART WITHOUT MOTOROLA'S CONSENT. © COPYRIGHT, MOTOROLA. THIS DOES NOT IMPLY PUBLICATION	CAD FILE NAME:
	PAGE 11 OF 37

REPAIR

ANTENNAS

MAIN ANTENNA
BOTTOM MAIN ANTENNA
850/900/1900/2100+QUAD-GSM

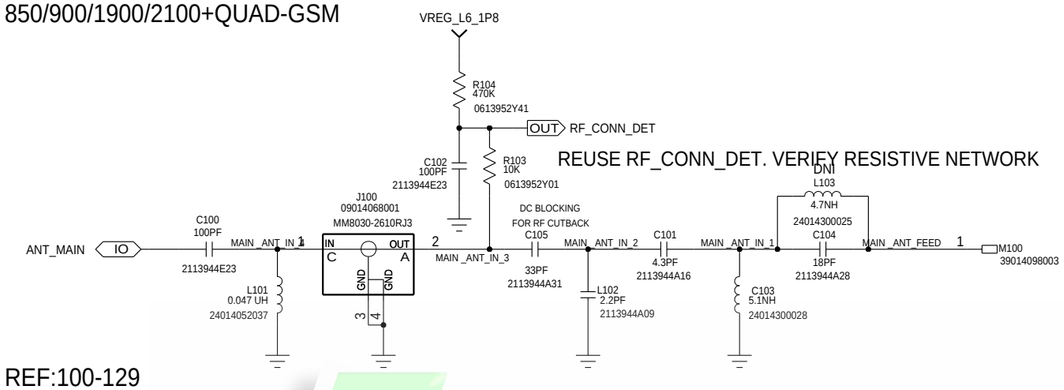

REF:100-129

BT/WLAN ANTENNA
TOP ANTENNA (NEXT TO AUDIO JACK)

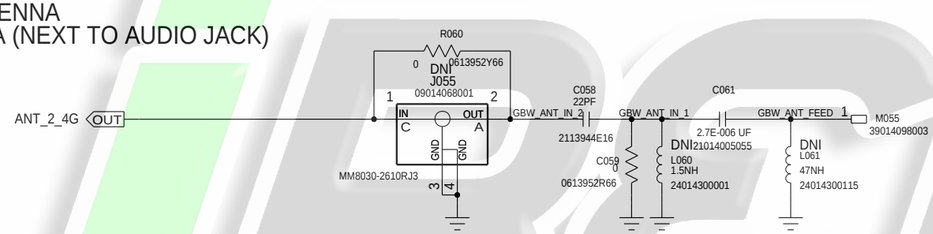

REF: 055-069

GPS ANTENNA
SIDE ANTENNA (ABOVE VOLUME KEYS)

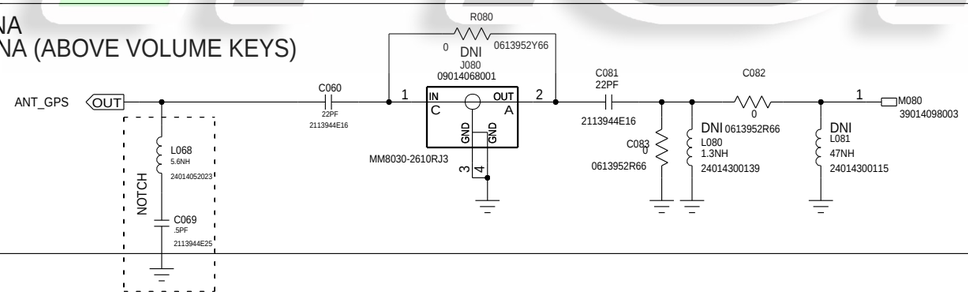

REF: 070-80

CDMA/WCDMA DIVERSITY MIMO RX ANTENNA
B40/DSDA ANTENNA
TOP ANTENNA (BY THE SPEAKER)

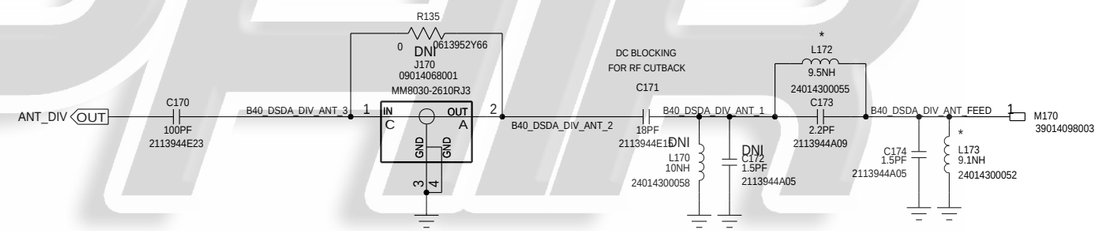

REF:130-199

APPROVALS	MOTOROLA MOBILE DEVICES
ENGINEER: MMI	BLOCK TITLE: peripherals
LAST MODIFIED BY: GRAHAM ALVEY Fri Aug 30 15:05:17 2013	
MOTOROLA CONFIDENTIAL RESTRICTED THE DRAWING ON THIS PRINT AND INFORMATION THEREWITH ARE PROPRIETARY TO MOTOROLA AND SHALL NOT BE USED OR DISCUSSED IN WHOLE OR IN PART WITHOUT MOTOROLA'S CONSENT. © COPYRIGHT, MOTOROLA. THIS DOES NOT IMPLY PUBLICATION	B — PROJECT NAME: 8226_ref_dsda.cpm — REV: 01 CAD FILE NAME: PAGE 12 OF 37

iRepair

JTAG

JTAG:MINI

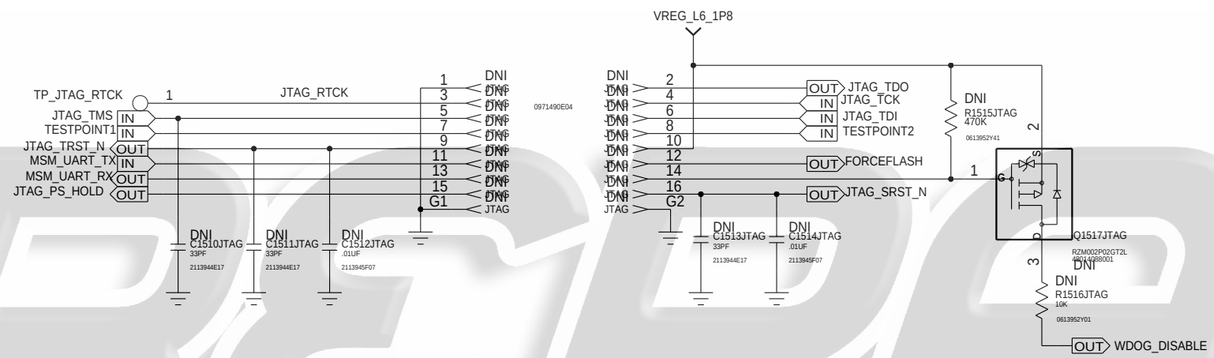

APPROVALS	MOTOROLA MOBILE DEVICES
ENGINEER:	BLOCK TITLE: peripherals
LAST MODIFIED BY: Fri Aug 30 15:05:13 2013	
MOTOROLA CONFIDENTIAL RESTRICTED	B — PROJECT NAME: 8226_ref_dsda.cpm — REV: 01
THE DRAWING ON THIS PRINT AND INFORMATION THEREWITH ARE PROPRIETARY TO MOTOROLA AND SHALL NOT BE USED OR DISCUSSED IN WHOLE OR IN PART WITHOUT MOTOROLA'S CONSENT. © COPYRIGHT, MOTOROLA. THIS DOES NOT IMPLY PUBLICATION	CAD FILE NAME:

MSM8226 CTRL/EMMC/SD

REF 1000-1099

MODE PIN CONFIGURATION
00 = NATIVE MODE ==> DNP R1000 & R1001
11 = BOUNDARY SCAN (BSAN) MODE ==> PLACE R1000 & R1001

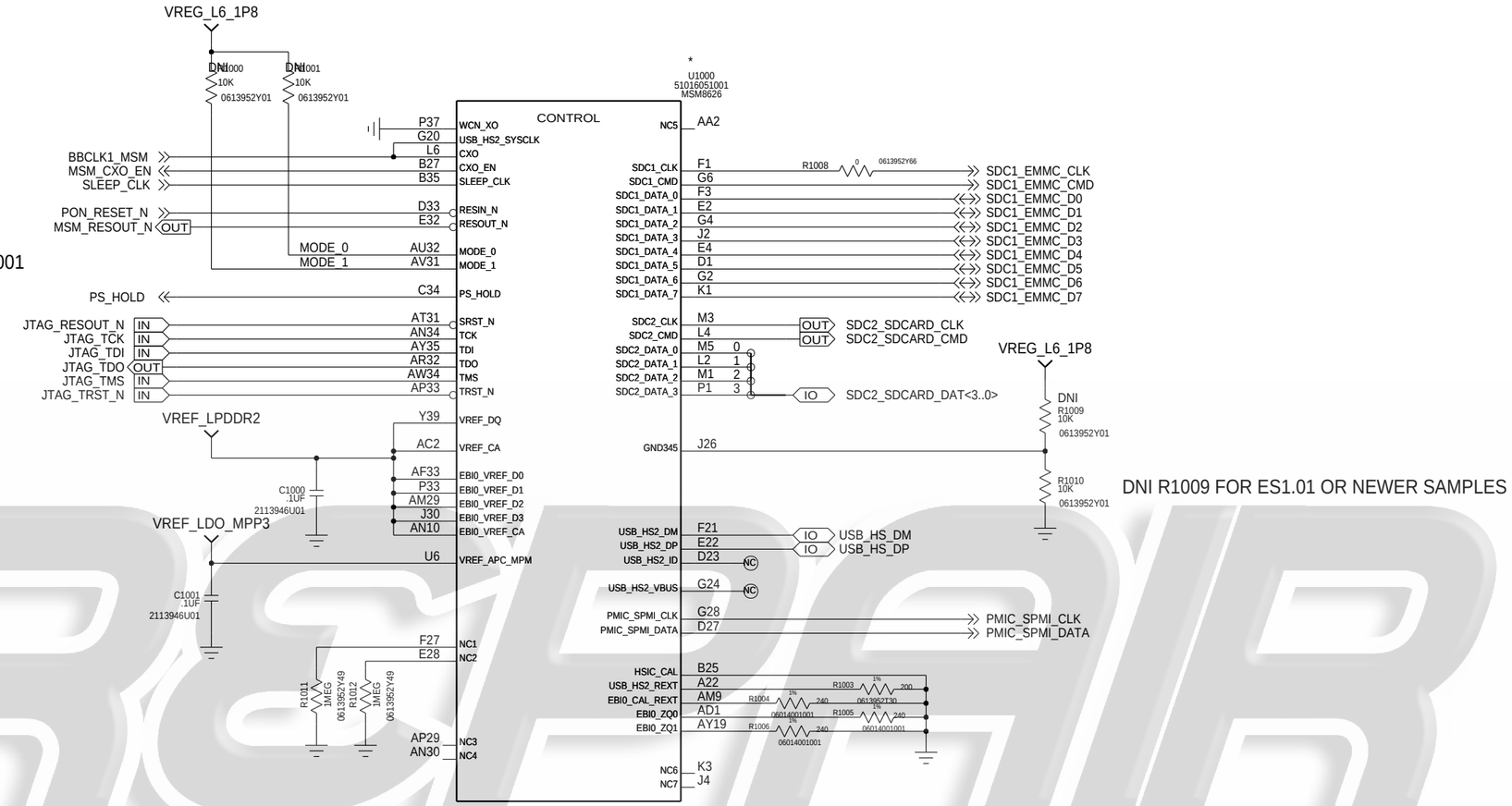

DNI R1009 FOR ES1.01 OR NEWER SAMPLES

POP MEMORY

8GBIT LPDDR2
X32, 2CS
168PIN
533MHZ

APPROVALS	MOTOROLA MOBILE DEVICES
ENGINEER: HUNG PHAM	BLOCK TITLE: block_msm8960_pm8921
LAST MODIFIED BY: HUNG PHAM Fri Aug 30 15:05:27 2013	
MOTOROLA CONFIDENTIAL RESTRICTED	PROJECT NAME: 8226_ref_dsda.cpm — REV: 01
	CAD FILE NAME: — PAGE 14 OF 37

THE DRAWING ON THIS PRINT AND INFORMATION THEREWITH ARE PROPRIETARY TO MOTOROLA AND SHALL NOT BE USED OR DISCUSSED IN WHOLE OR IN PART WITHOUT MOTOROLA'S CONSENT.
© COPYRIGHT, MOTOROLA. THIS DOES NOT IMPLY PUBLICATION

MSM8226 GPIO

REF 1200-1299

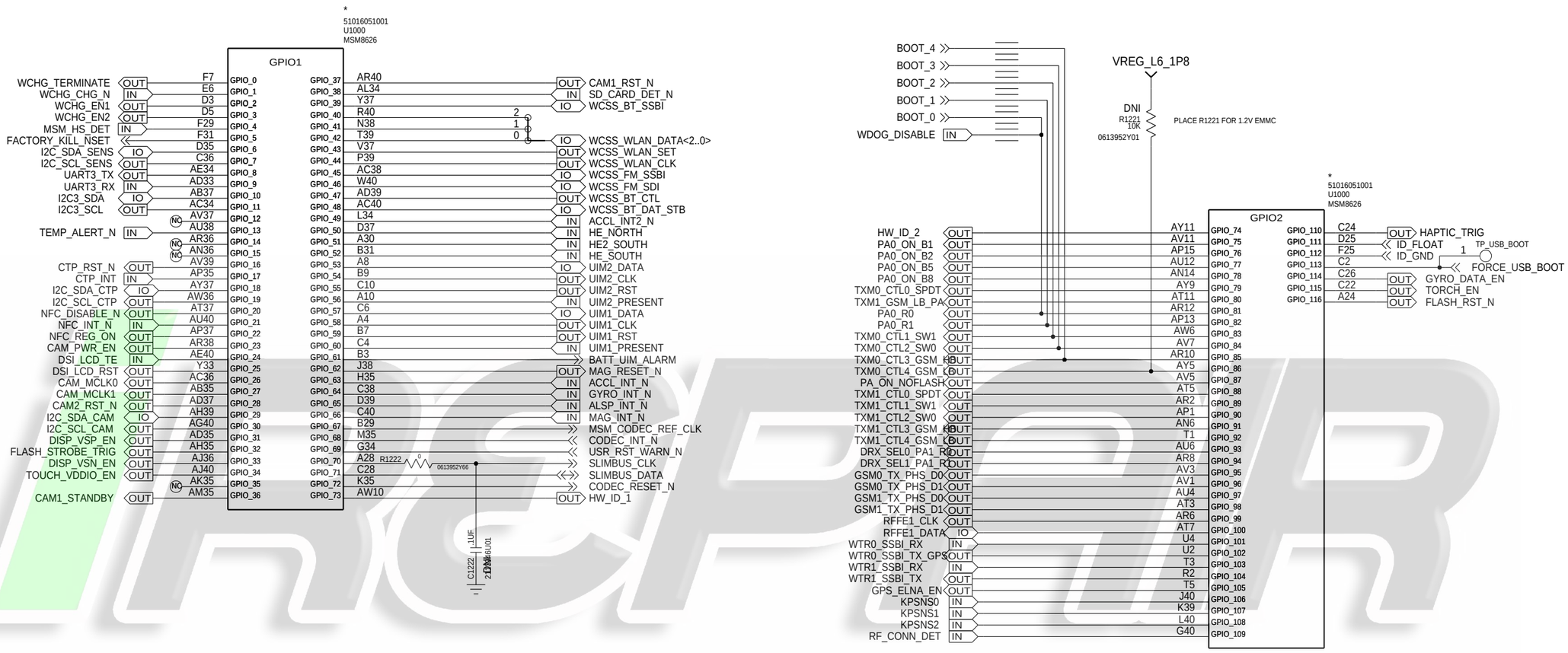

APPROVALS	MOTOROLA MOBILE DEVICES
ENGINEER:	BLOCK TITLE: block_msm8960_pm8921
LAST MODIFIED BY: HUNG PHAM Fri Aug 30 15:05:28 2013	
MOTOROLA CONFIDENTIAL RESTRICTED	B — PROJECT NAME: 8226_ref_dsda.cpm — REV: 01
THE DRAWING ON THIS PRINT AND INFORMATION THEREWITH ARE PROPRIETARY TO MOTOROLA AND SHALL NOT BE USED OR DISCUSSED IN WHOLE OR IN PART WITHOUT MOTOROLA'S CONSENT. © COPYRIGHT, MOTOROLA. THIS DOES NOT IMPLY PUBLICATION	CAD FILE NAME: — PAGE 15 OF 37

iRepair

MSM8226 GPIO 2

REF 1200-1299

BOOT_CONFIG[4..0], INTERNAL PD

0000X = EMMC -> SDC2 -> USB
0001X = SDC2 -> EMMC
0010X = EMMC
0011X = USB-HS
0110X = SPI NOR BLSP1
0111X = SPI NOR BLSP2

BOOT_CONFIG[0]

0 = NORMAL
1 = WDOG DISABLE

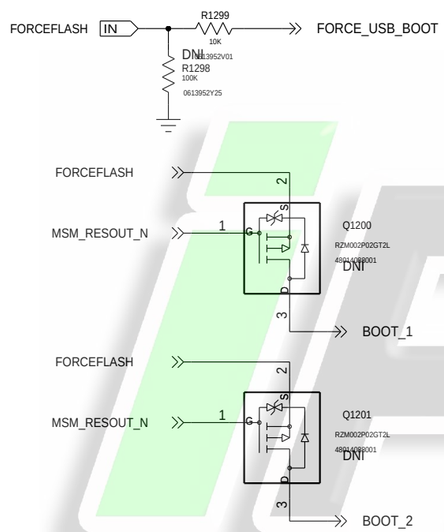

I2C BUS PULL-UP

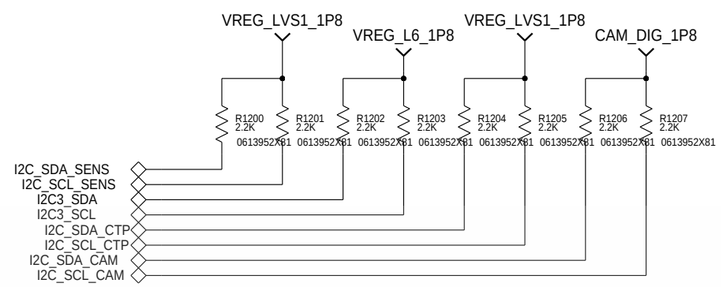

SPM1 & RFFE PULL-DOWN

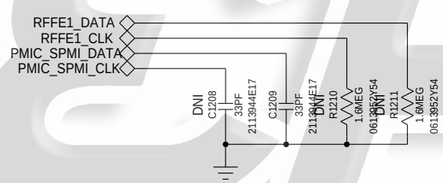

MOT BOARD ID

FOR RUNTIME REVISION INFORMATION, REFER TO:
https://sites.google.com/a/motorola.com/runtime-product-ids

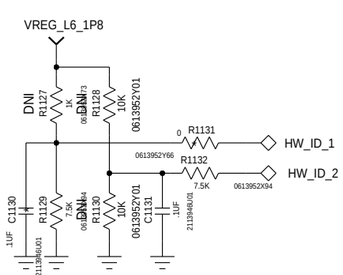

APPROVALS	MOTOROLA MOBILE DEVICES	
ENGINEER:	BLOCK TITLE: block_msm8960_pm8921	
LAST MODIFIED BY: HUNG PHAM Fri Aug 30 15:05:37 2013		
MOTOROLA CONFIDENTIAL RESTRICTED THE DRAWING ON THIS PRINT AND INFORMATION THEREWITH ARE PROPRIETARY TO MOTOROLA AND SHALL NOT BE USED OR DISCUSSED IN WHOLE OR IN PART WITHOUT MOTOROLA'S CONSENT. © COPYRIGHT, MOTOROLA. THIS DOES NOT IMPLY PUBLICATION	B PROJECT NAME: 8226_ref_dsda.cpm	REV 01
	CAD FILE NAME:	PAGE 16 OF 37

REPAIR

MSM8226 MIPI/DSI/CSI/RF

REF 1200-1299

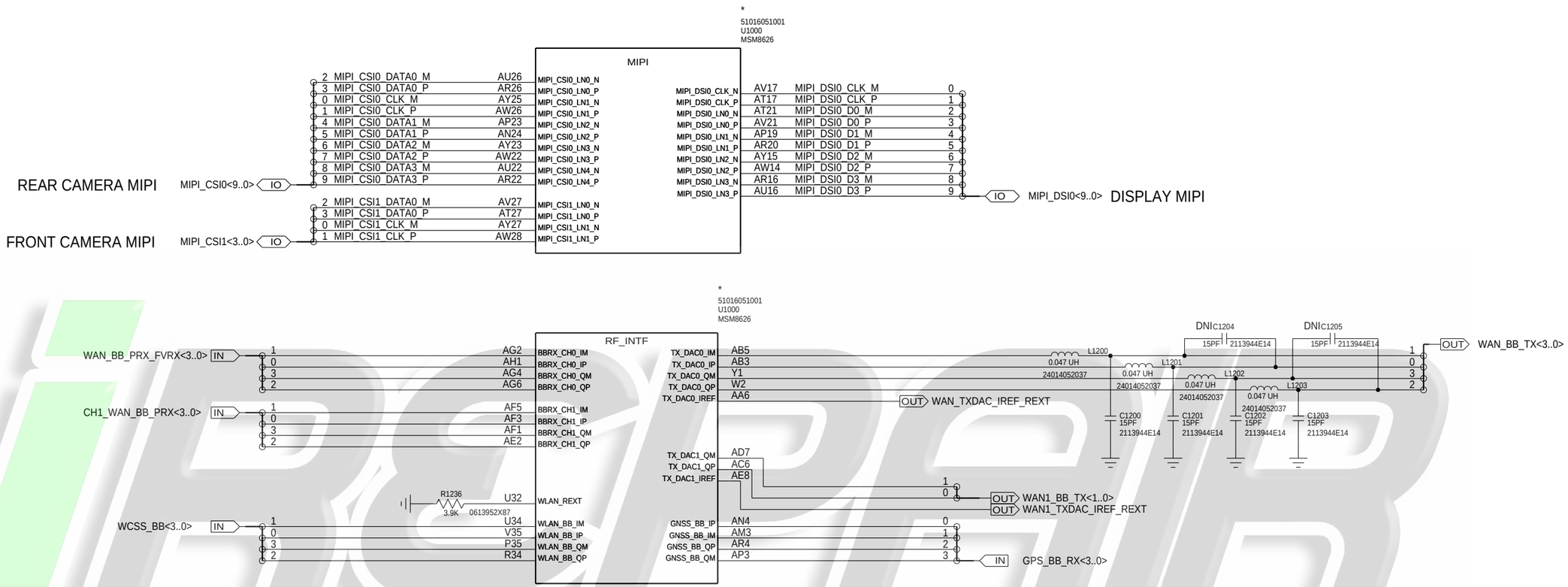

APPROVALS	MOTOROLA MOBILE DEVICES	
ENGINEER:	BLOCK TITLE: block_msm8960_pm8921	
LAST MODIFIED BY: HUNG PHAM Fri Aug 30 15:05:29 2013		
MOTOROLA CONFIDENTIAL RESTRICTED	B	PROJECT NAME: 8226_ref_dsda.cpm — REV: 01
THE DRAWING ON THIS PRINT AND INFORMATION THEREWITH ARE PROPRIETARY TO MOTOROLA AND SHALL NOT BE USED OR DISCUSSED IN WHOLE OR IN PART WITHOUT MOTOROLA'S CONSENT. © COPYRIGHT, MOTOROLA. THIS DOES NOT IMPLY PUBLICATION	CAD FILE NAME:	PAGE 17 OF 37

MSM8226 POWER 1

REF 1300-1399

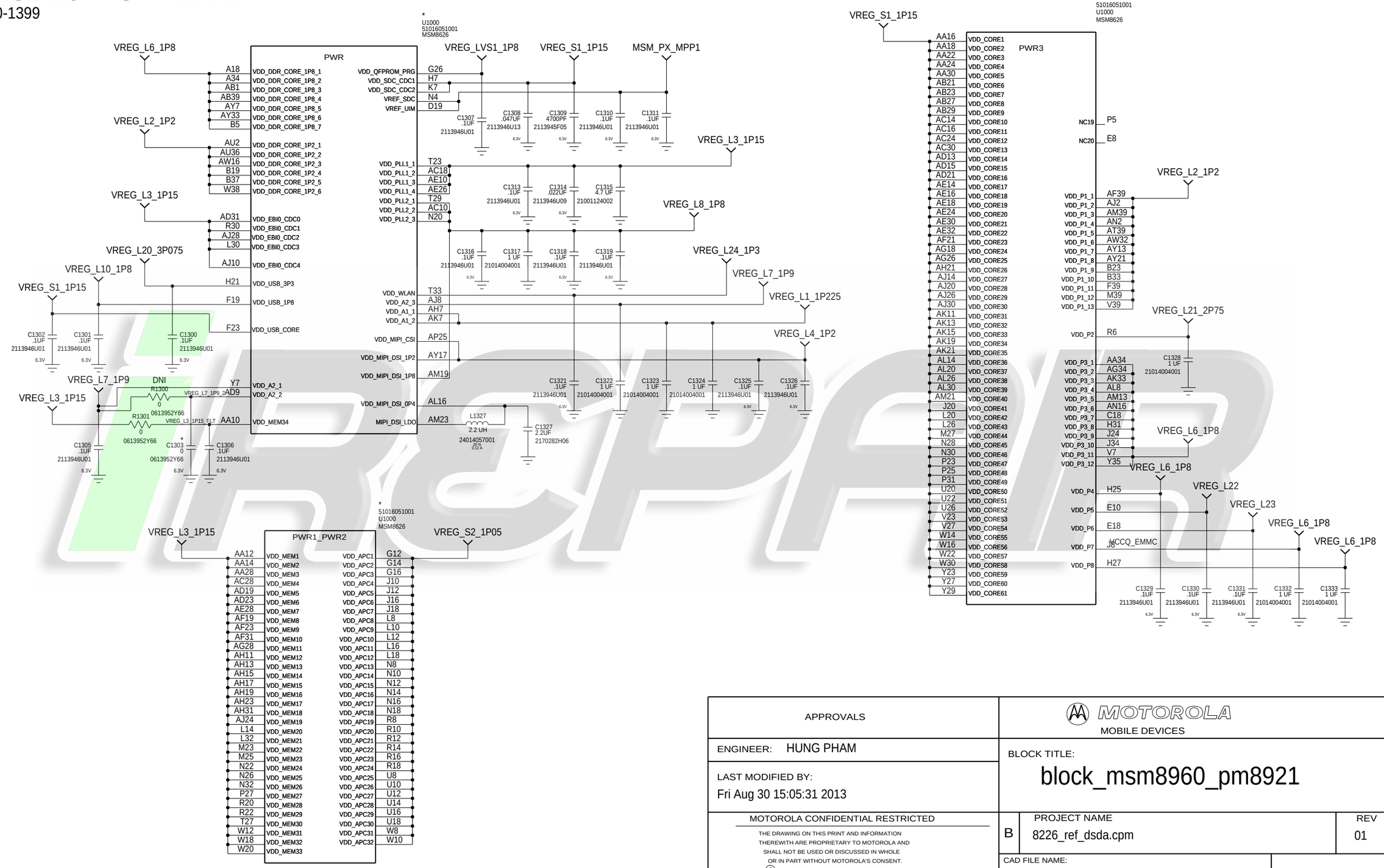

APPROVALS	MOTOROLA MOBILE DEVICES
ENGINEER: HUNG PHAM	BLOCK TITLE: block_msm8960_pm8921
LAST MODIFIED BY: Fri Aug 30 15:05:31 2013	
MOTOROLA CONFIDENTIAL RESTRICTED	B — PROJECT NAME: 8226_ref_dsda.cpm — REV: 01
THE DRAWING ON THIS PRINT AND INFORMATION THEREWITH ARE PROPRIETARY TO MOTOROLA AND SHALL NOT BE USED OR DISCUSSED IN WHOLE OR IN PART WITHOUT MOTOROLA'S CONSENT.	CAD FILE NAME:
© COPYRIGHT, MOTOROLA. THIS DOES NOT IMPLY PUBLICATION	PAGE 18 OF 37

MSM8226 POWER 2

REF 1400-1499

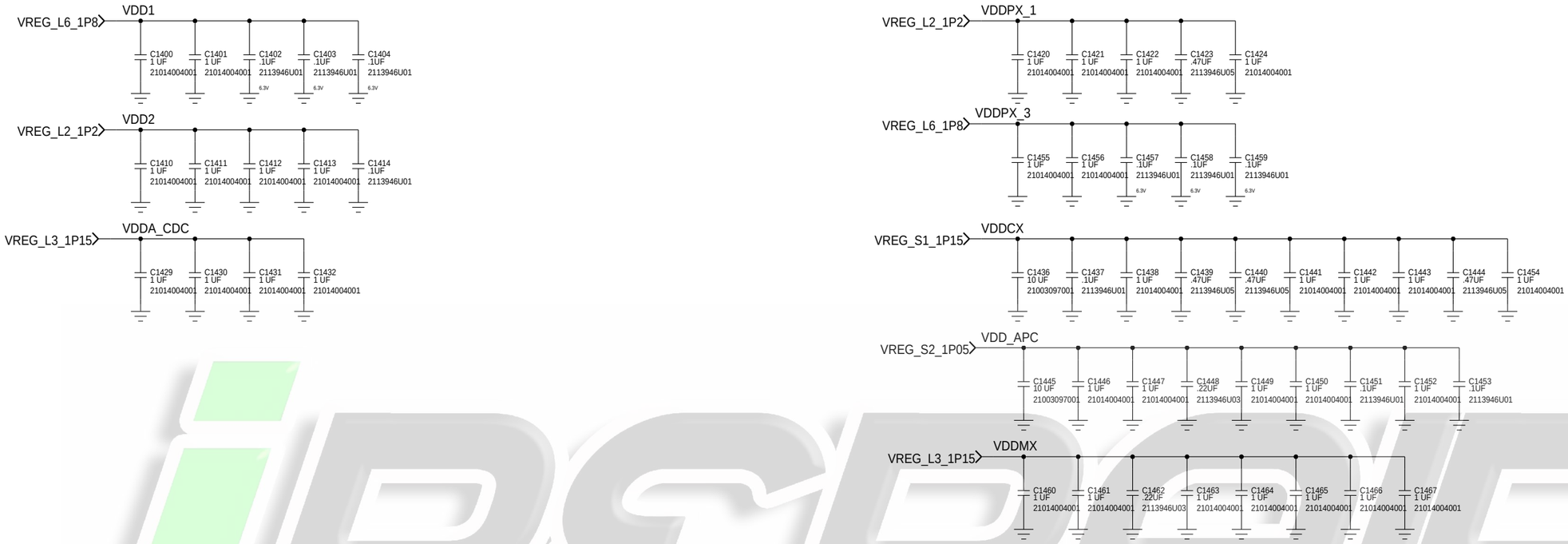

iREPAIR

APPROVALS	MOTOROLA MOBILE DEVICES
ENGINEER:	BLOCK TITLE: block_msm8960_pm8921
LAST MODIFIED BY: HUNG PHAM Fri Aug 30 15:05:38 2013	
MOTOROLA CONFIDENTIAL RESTRICTED	B — PROJECT NAME: 8226_ref_dsda.cpm — REV: 01
	CAD FILE NAME: — PAGE 19 OF 37

THE DRAWING ON THIS PRINT AND INFORMATION THEREWITH ARE PROPRIETARY TO MOTOROLA AND SHALL NOT BE USED OR DISCUSSED IN WHOLE OR IN PART WITHOUT MOTOROLA'S CONSENT.
© COPYRIGHT, MOTOROLA. THIS DOES NOT IMPLY PUBLICATION

MSM8226 GROUND

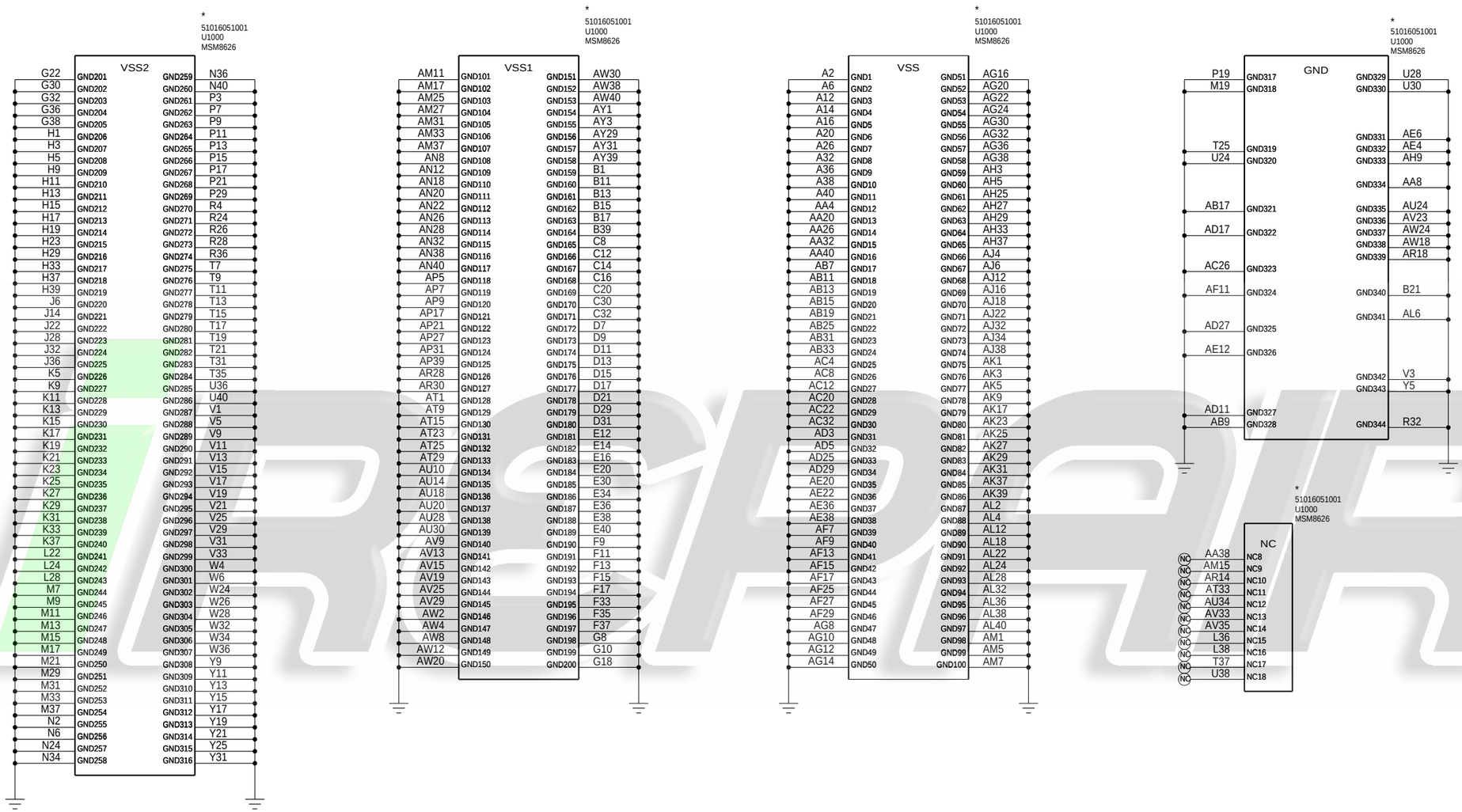

APPROVALS	MOTOROLA MOBILE DEVICES
ENGINEER:	BLOCK TITLE: block_msm8960_pm8921
LAST MODIFIED BY: HUNG PHAM Fri Aug 30 15:05:40 2013	
MOTOROLA CONFIDENTIAL RESTRICTED	B — PROJECT NAME: 8226_ref_dsda.cpm — REV: 01
THE DRAWING ON THIS PRINT AND INFORMATION THEREWITH ARE PROPRIETARY TO MOTOROLA AND SHALL NOT BE USED OR DISCUSSED IN WHOLE OR IN PART WITHOUT MOTOROLA'S CONSENT. © COPYRIGHT, MOTOROLA. THIS DOES NOT IMPLY PUBLICATION	CAD FILE NAME:
	PAGE 20 OF 37

REPAIR

WCD9302 AUDIO

REF 1500-1579

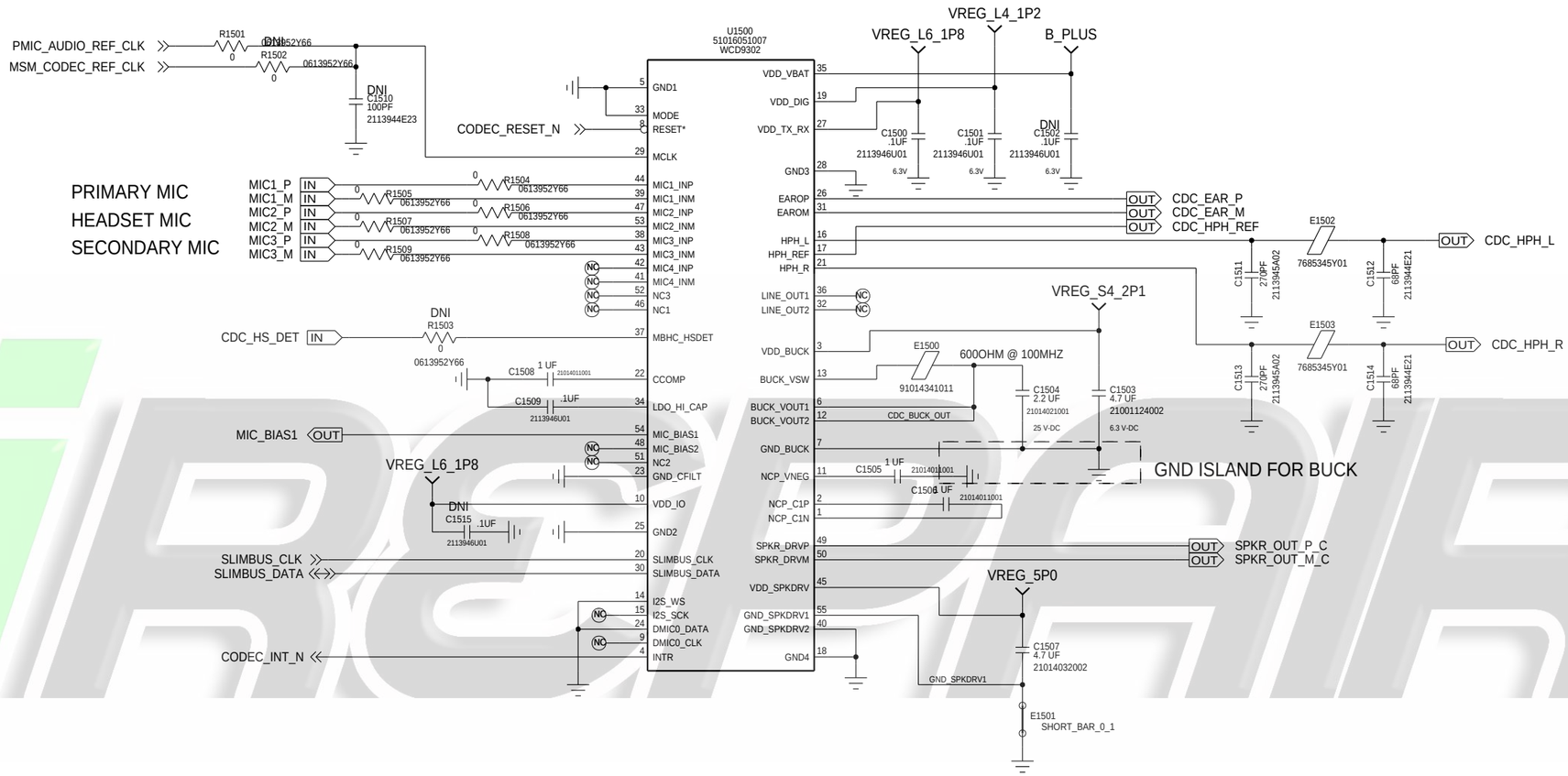

APPROVALS	MOTOROLA MOBILE DEVICES
ENGINEER:	BLOCK TITLE: block_msm8960_pm8921
LAST MODIFIED BY: HUNG PHAM Fri Aug 30 15:05:32 2013	
MOTOROLA CONFIDENTIAL RESTRICTED	B — PROJECT NAME: 8226_ref_dsda.cpm — REV: 01
THE DRAWING ON THIS PRINT AND INFORMATION THEREWITH ARE PROPRIETARY TO MOTOROLA AND SHALL NOT BE USED OR DISCUSSED IN WHOLE OR IN PART WITHOUT MOTOROLA'S CONSENT. © COPYRIGHT, MOTOROLA. THIS DOES NOT IMPLY PUBLICATION	CAD FILE NAME: — PAGE 21 OF 37

EMMC

REF 1600-1699

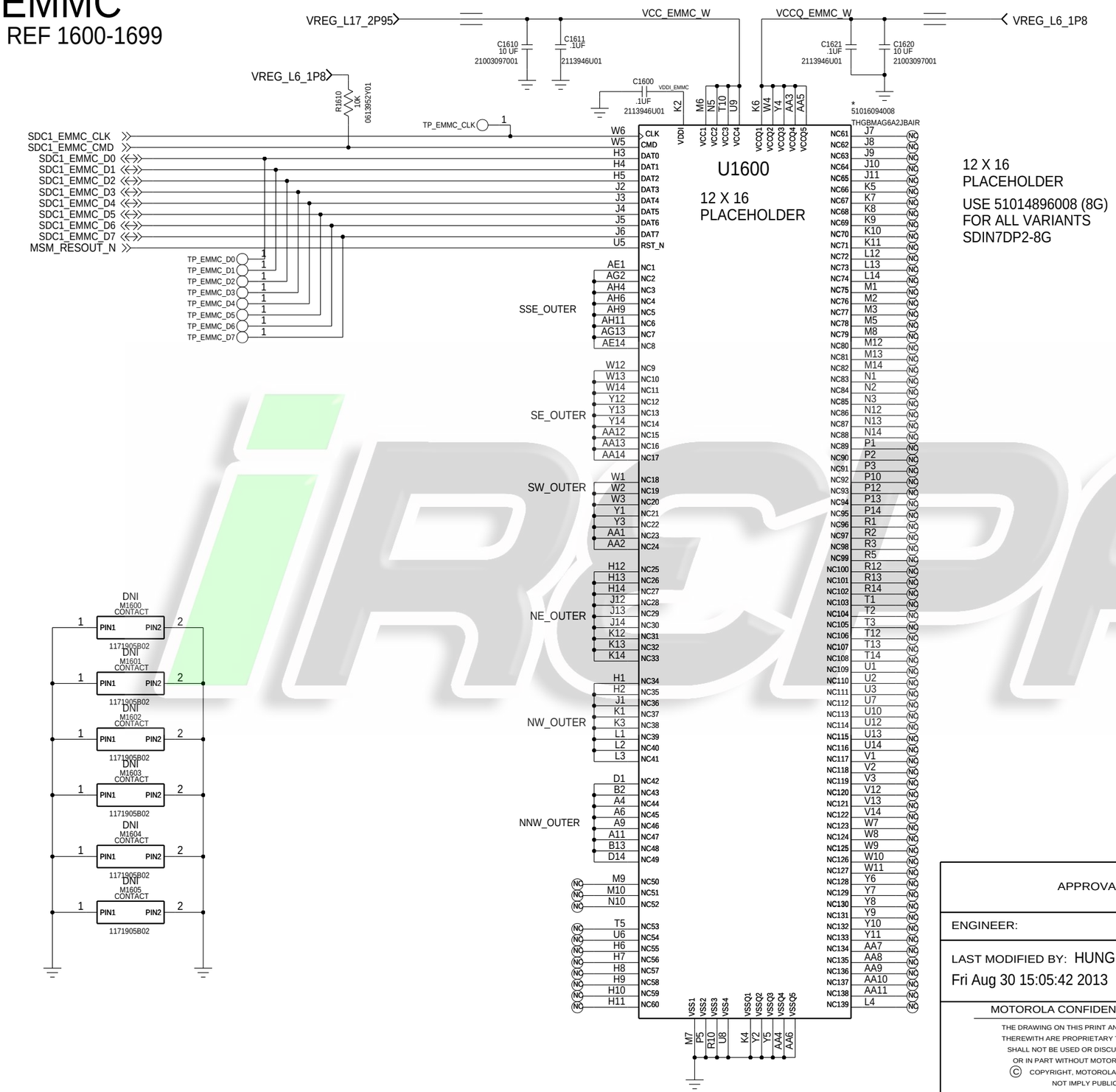

iREPAIR

APPROVALS	MOTOROLA MOBILE DEVICES	
ENGINEER:	BLOCK TITLE: block_msm8960_pm8921	
LAST MODIFIED BY: HUNG PHAM Fri Aug 30 15:05:42 2013		
MOTOROLA CONFIDENTIAL RESTRICTED	B	PROJECT NAME 8226_ref_dsda.cpm / REV 01
	CAD FILE NAME:	PAGE 22 OF 37

THE DRAWING ON THIS PRINT AND INFORMATION THEREWITH ARE PROPRIETARY TO MOTOROLA AND SHALL NOT BE USED OR DISCUSSED IN WHOLE OR IN PART WITHOUT MOTOROLA'S CONSENT.
© COPYRIGHT, MOTOROLA. THIS DOES NOT IMPLY PUBLICATION

PM8226 CTRL/CLK/MPP

REF 2000-2099

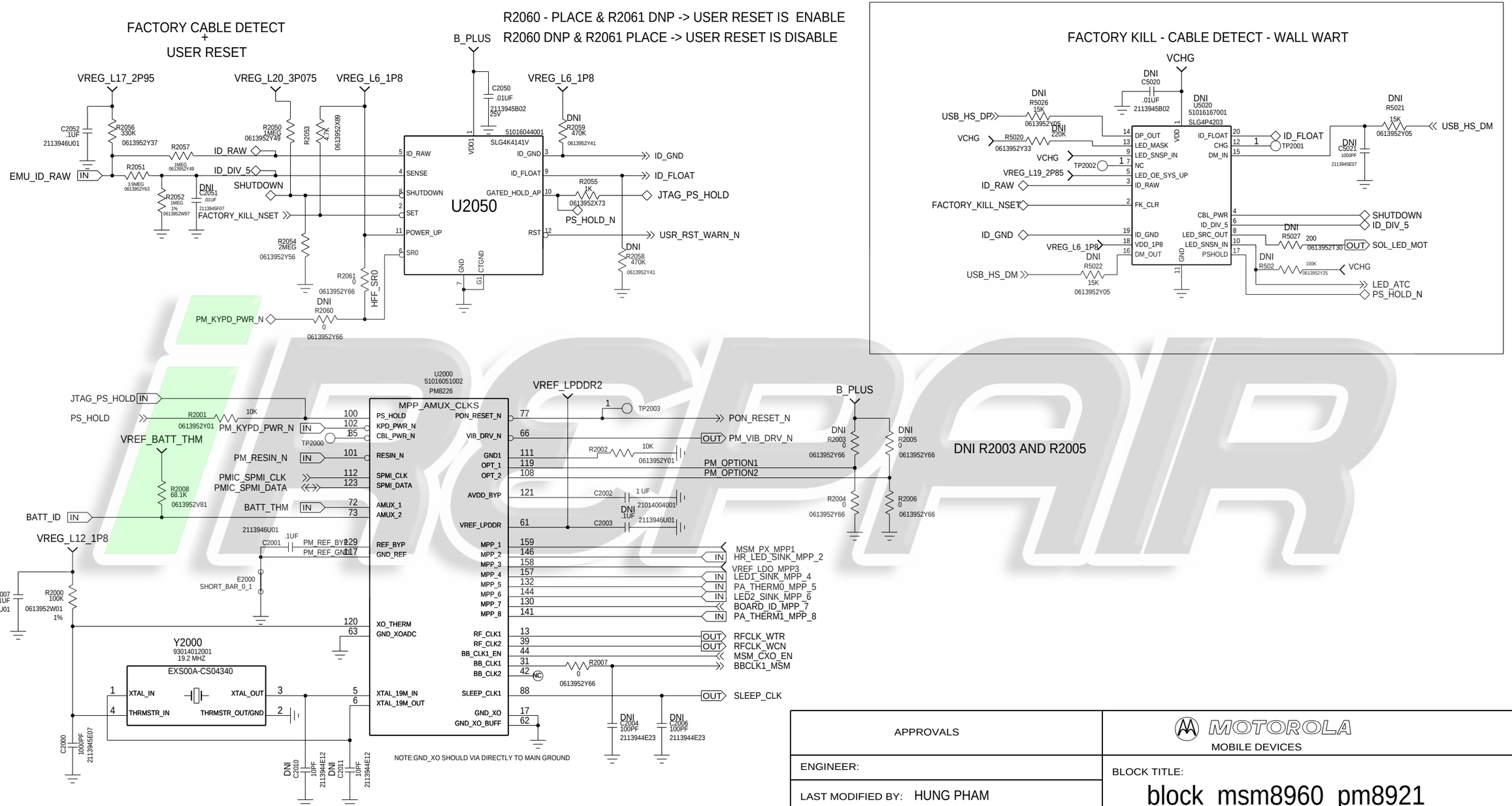

BASED ON 80-N1622-41 REV. H

APPROVALS	MOTOROLA MOBILE DEVICES	
ENGINEER:	BLOCK TITLE: block_msm8960_pm8921	
LAST MODIFIED BY: HUNG PHAM Fri Aug 30 15:05:33 2013		
MOTOROLA CONFIDENTIAL RESTRICTED THE DRAWING ON THIS PRINT AND INFORMATION THEREWITH ARE PROPRIETARY TO MOTOROLA AND SHALL NOT BE USED OR DISCUSSED IN WHOLE OR IN PART WITHOUT MOTOROLA'S CONSENT. © COPYRIGHT, MOTOROLA. THIS DOES NOT IMPLY PUBLICATION	B PROJECT NAME: 8226_ref_dsda.cpm	REV: 01
	CAD FILE NAME:	PAGE 23 OF 37

PM8226 CHARGING/LED/GPIO

REF 2100-2199

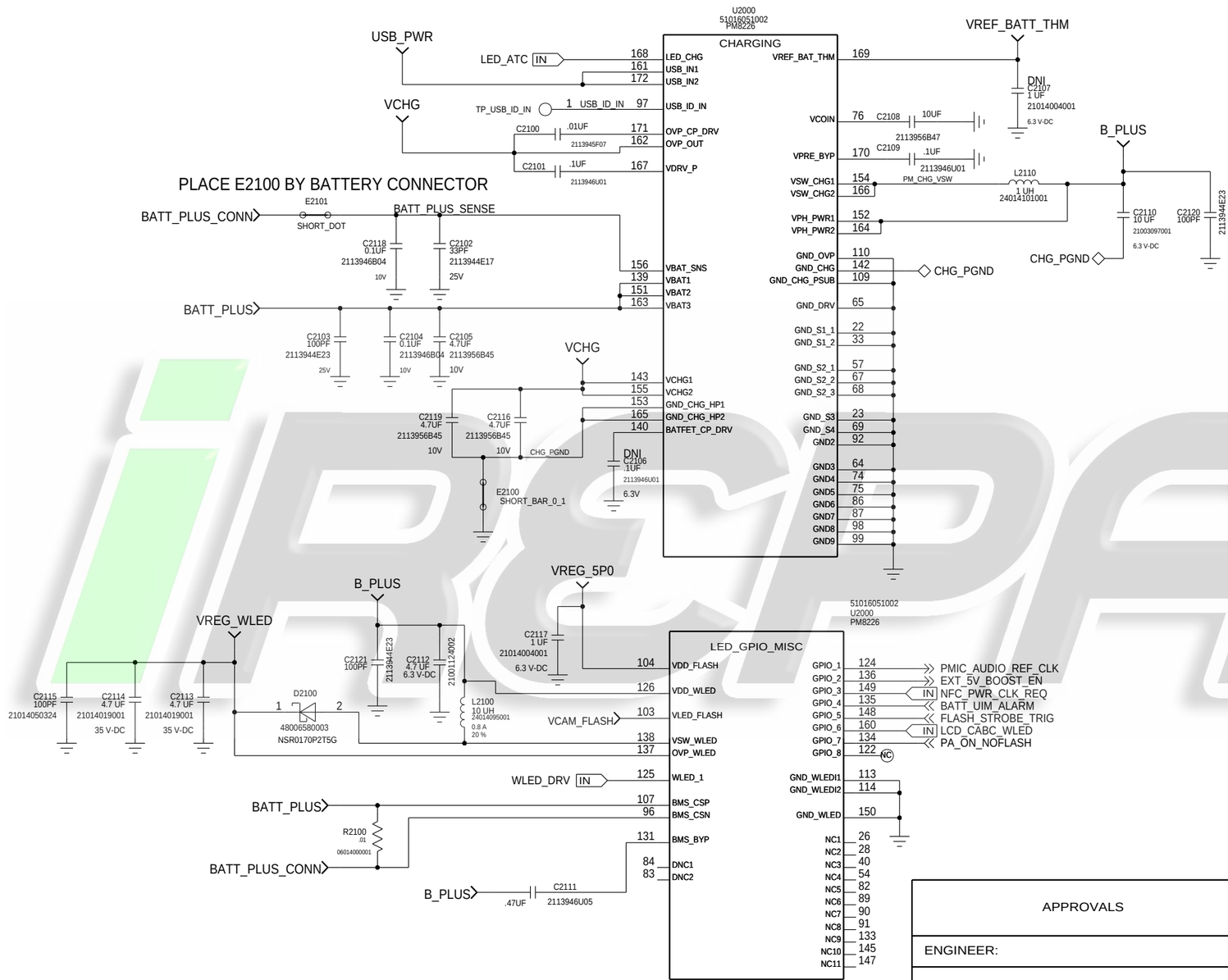

APPROVALS	MOTOROLA MOBILE DEVICES	
ENGINEER:	BLOCK TITLE: block_msm8960_pm8921	
LAST MODIFIED BY: Fri Aug 30 15:05:35 2013		
MOTOROLA CONFIDENTIAL RESTRICTED	B	PROJECT NAME: 8226_ref_dsda.cpm — REV: 01
THE DRAWING ON THIS PRINT AND INFORMATION THEREWITH ARE PROPRIETARY TO MOTOROLA AND SHALL NOT BE USED OR DISCUSSED IN WHOLE OR IN PART WITHOUT MOTOROLA'S CONSENT. © COPYRIGHT, MOTOROLA. THIS DOES NOT IMPLY PUBLICATION	CAD FILE NAME:	PAGE 24 OF 37

BASED ON 80-N1622-41 REV. H

iRepair

PM8226 SMPS

REF 2200-2299

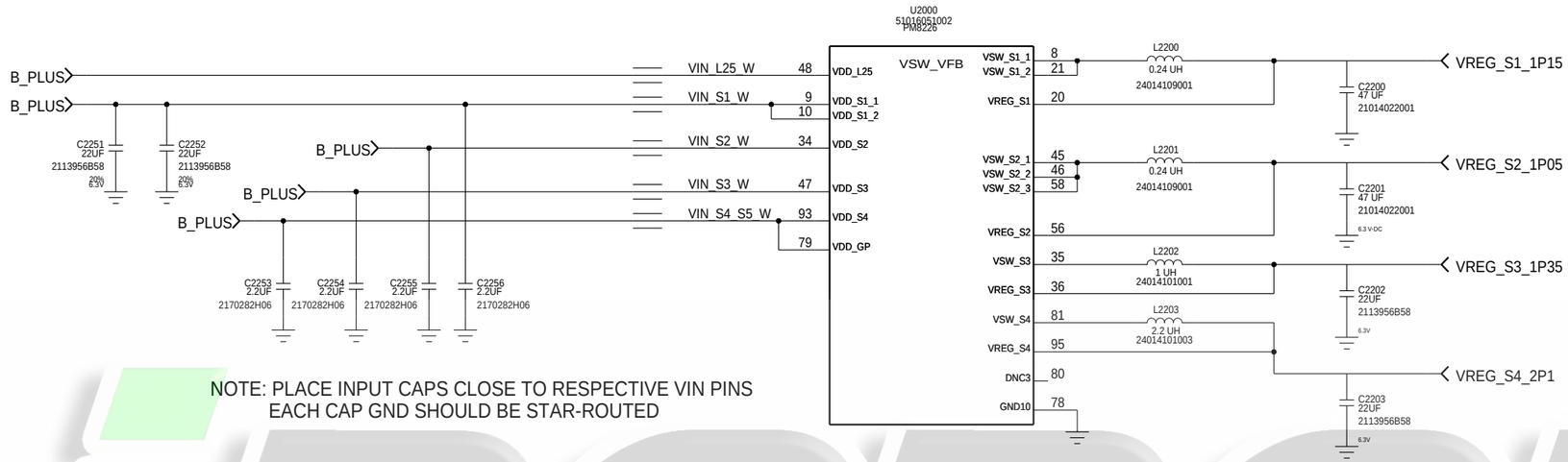

NOTE: PLACE INPUT CAPS CLOSE TO RESPECTIVE VIN PINS
EACH CAP GND SHOULD BE STAR-ROUTED

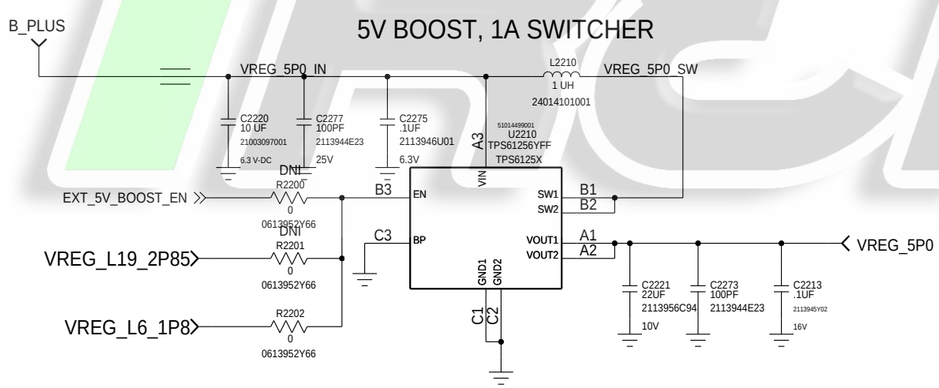

BASED ON 80-N1622-41 REV. H

APPROVALS	MOTOROLA MOBILE DEVICES
ENGINEER:	BLOCK TITLE: block_msm8960_pm8921
LAST MODIFIED BY: Fri Aug 30 15:05:36 2013	
MOTOROLA CONFIDENTIAL RESTRICTED	B — PROJECT NAME: 8226_ref_dsda.cpm — REV: 01
THE DRAWING ON THIS PRINT AND INFORMATION THEREWITH ARE PROPRIETARY TO MOTOROLA AND SHALL NOT BE USED OR DISCUSSED IN WHOLE OR IN PART WITHOUT MOTOROLA'S CONSENT. © COPYRIGHT, MOTOROLA. THIS DOES NOT IMPLY PUBLICATION	CAD FILE NAME:
	PAGE 25 OF 37

iRepair

PM8226 VREGS

REF 2300-2399

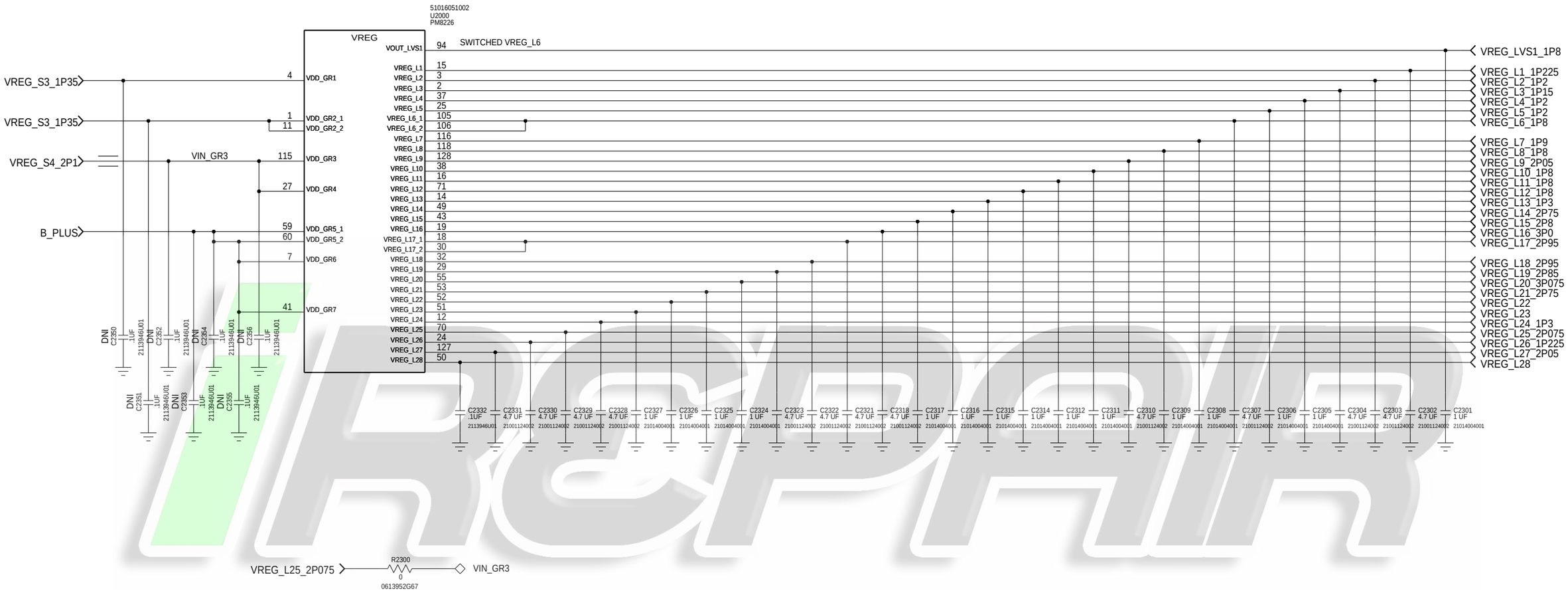

BASED ON 80-N1622-41 REV. E

APPROVALS	MOTOROLA MOBILE DEVICES
ENGINEER:	BLOCK TITLE: block_msm8960_pm8921
LAST MODIFIED BY: Fri Aug 30 15:05:40 2013	
MOTOROLA CONFIDENTIAL RESTRICTED	B — PROJECT NAME: 8226_ref_dsda.cpm — REV: 01
THE DRAWING ON THIS PRINT AND INFORMATION THEREWITH ARE PROPRIETARY TO MOTOROLA AND SHALL NOT BE USED OR DISCUSSED IN WHOLE OR IN PART WITHOUT MOTOROLA'S CONSENT. © COPYRIGHT, MOTOROLA. THIS DOES NOT IMPLY PUBLICATION	CAD FILE NAME: — PAGE 26 OF 37

WCN3620 RF/CTRL

REF 4600-4699

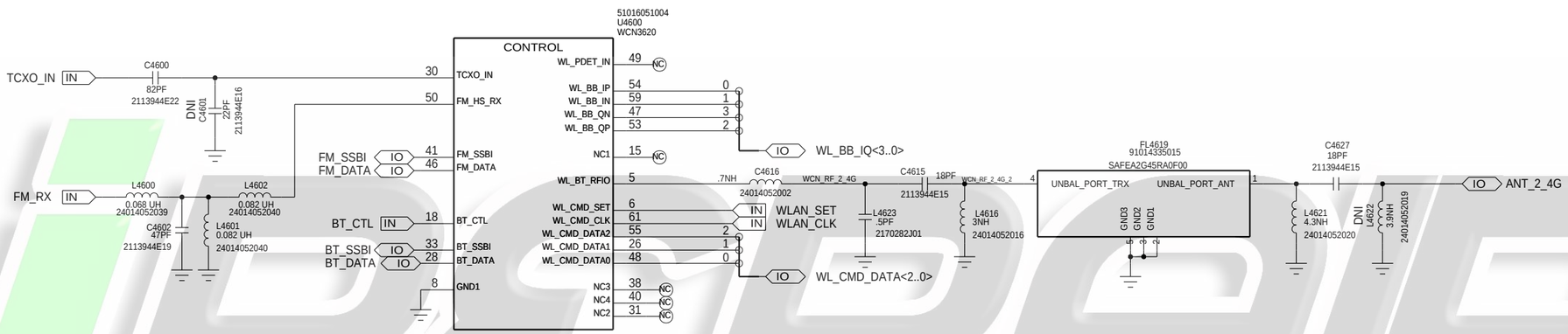

BASED ON 80-WL006-44 REV C

APPROVALS	MOTOROLA MOBILE DEVICES
ENGINEER:	BLOCK TITLE: block_wcn3660
LAST MODIFIED BY: FROEHLING Fri Aug 30 15:05:46 2013	
MOTOROLA CONFIDENTIAL RESTRICTED	PROJECT NAME: 8226_ref_dsda.cpm — REV: 01
	CAD FILE NAME: — PAGE 27 OF 37

THE DRAWING ON THIS PRINT AND INFORMATION THEREWITH ARE PROPRIETARY TO MOTOROLA AND SHALL NOT BE USED OR DISCUSSED IN WHOLE OR IN PART WITHOUT MOTOROLA'S CONSENT.
© COPYRIGHT, MOTOROLA. THIS DOES NOT IMPLY PUBLICATION

WCN3620 POWER

REF 4700-4799

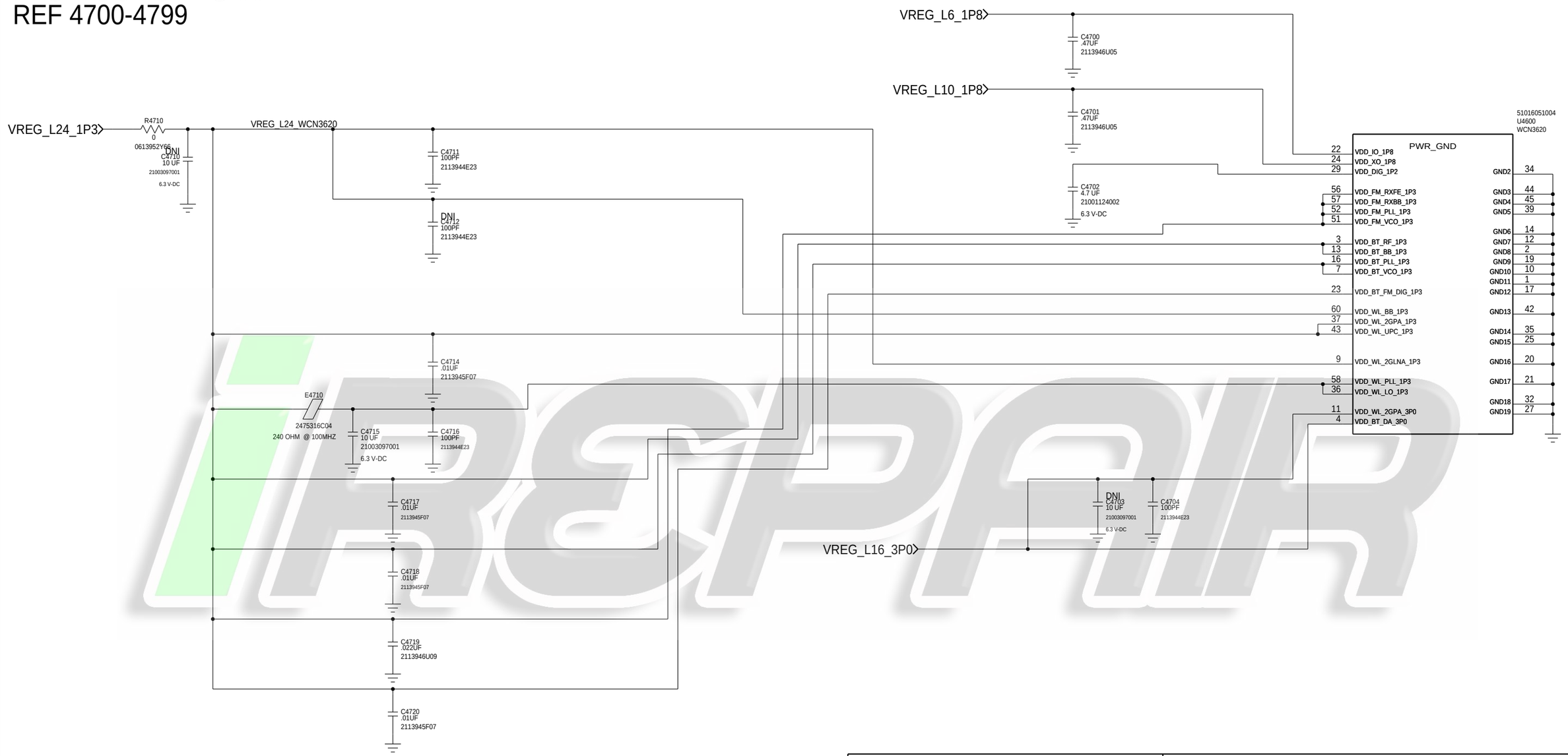

iREPAIR

APPROVALS	MOTOROLA MOBILE DEVICES
ENGINEER:	BLOCK TITLE: block_wcn3660
LAST MODIFIED BY: FROEHLING Fri Aug 30 15:05:47 2013	
MOTOROLA CONFIDENTIAL RESTRICTED	B — PROJECT NAME: 8226_ref_dsda.cpm — REV: 01
THE DRAWING ON THIS PRINT AND INFORMATION THEREWITH ARE PROPRIETARY TO MOTOROLA AND SHALL NOT BE USED OR DISCUSSED IN WHOLE OR IN PART WITHOUT MOTOROLA'S CONSENT. © COPYRIGHT, MOTOROLA. THIS DOES NOT IMPLY PUBLICATION	CAD FILE NAME: — PAGE 28 OF 37

BASED ON 80-WL006-44 REV C

WTR2605 BB RF

REF 3000-3099

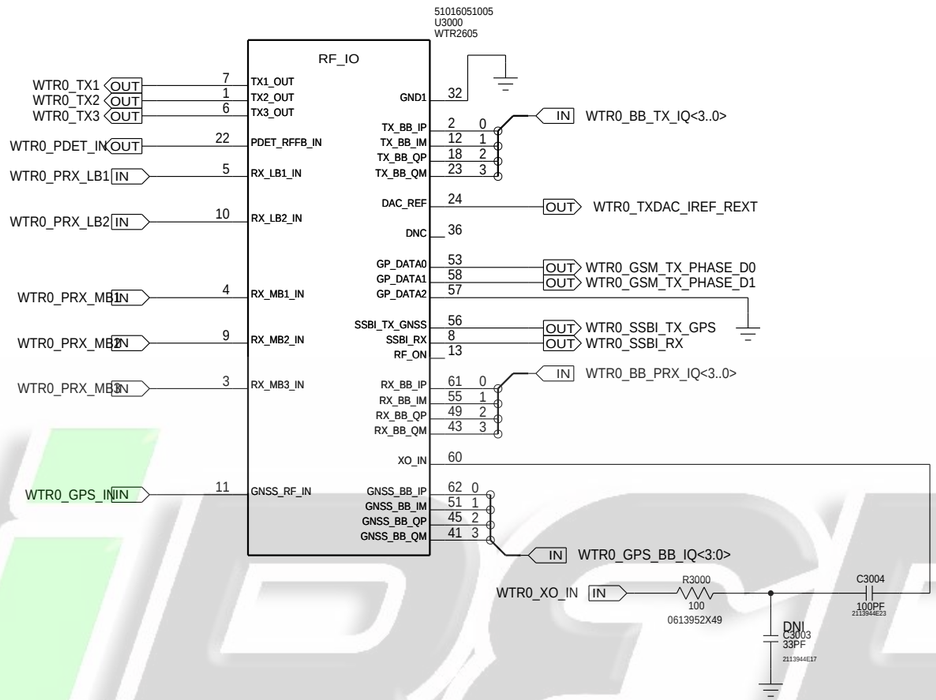

iREPAIR

BASED ON 80-N5420-45 REV. C

APPROVALS	MOTOROLA MOBILE DEVICES
ENGINEER: GRAHAM ALVEY	BLOCK TITLE: block_wtr2605
LAST MODIFIED BY: Fri Aug 30 15:05:48 2013	
MOTOROLA CONFIDENTIAL RESTRICTED	B — PROJECT NAME: 8226_ref_dsda.cpm — REV: 01
THE DRAWING ON THIS PRINT AND INFORMATION THEREWITH ARE PROPRIETARY TO MOTOROLA AND SHALL NOT BE USED OR DISCUSSED IN WHOLE OR IN PART WITHOUT MOTOROLA'S CONSENT. © COPYRIGHT, MOTOROLA. THIS DOES NOT IMPLY PUBLICATION	CAD FILE NAME:
	PAGE 29 OF 37

WTR2605 POWER

REF 3100-3199

WTR2605 POWER DISTRIBUTION 2.05V, 1.8V, & 1.225V

NOTE: STAR ROUTE TO INDIVIDUAL DECOUPLING CAPS.

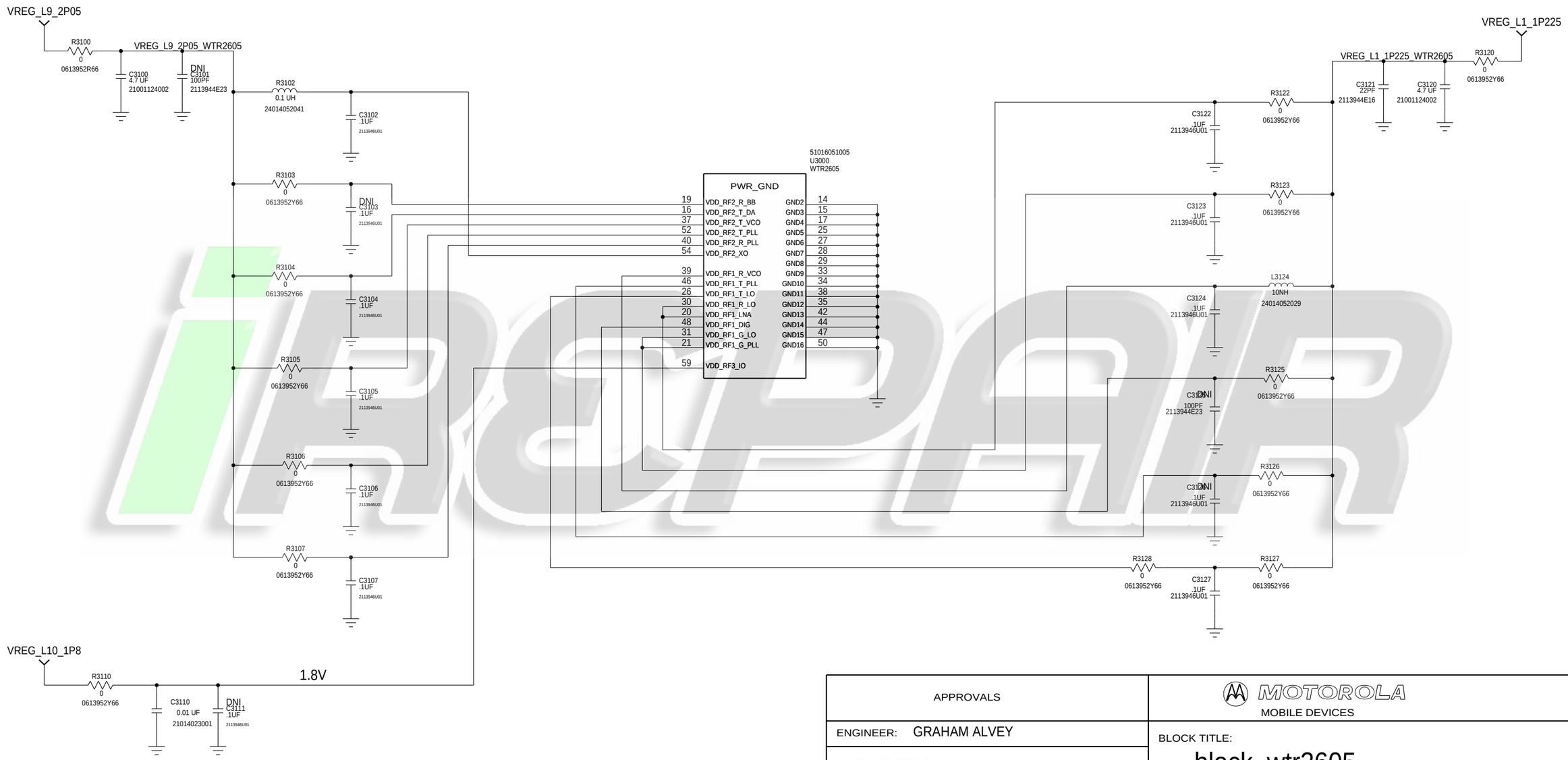

BASED ON 80-5420-45 REV. C

APPROVALS	MOTOROLA MOBILE DEVICES
ENGINEER: GRAHAM ALVEY	BLOCK TITLE: block_wtr2605
LAST MODIFIED BY: Fri Aug 30 15:05:49 2013	
MOTOROLA CONFIDENTIAL RESTRICTED	B — PROJECT NAME: 8226_ref_dsda.cpm — REV: 01
THE DRAWING ON THIS PRINT AND INFORMATION THEREWITH ARE PROPRIETARY TO MOTOROLA AND SHALL NOT BE USED OR DISCUSSED IN WHOLE OR IN PART WITHOUT MOTOROLA'S CONSENT. © COPYRIGHT, MOTOROLA. THIS DOES NOT IMPLY PUBLICATION	CAD FILE NAME:
	PAGE 30 OF 37

WFR2600 BB RF

REF 3200-3299

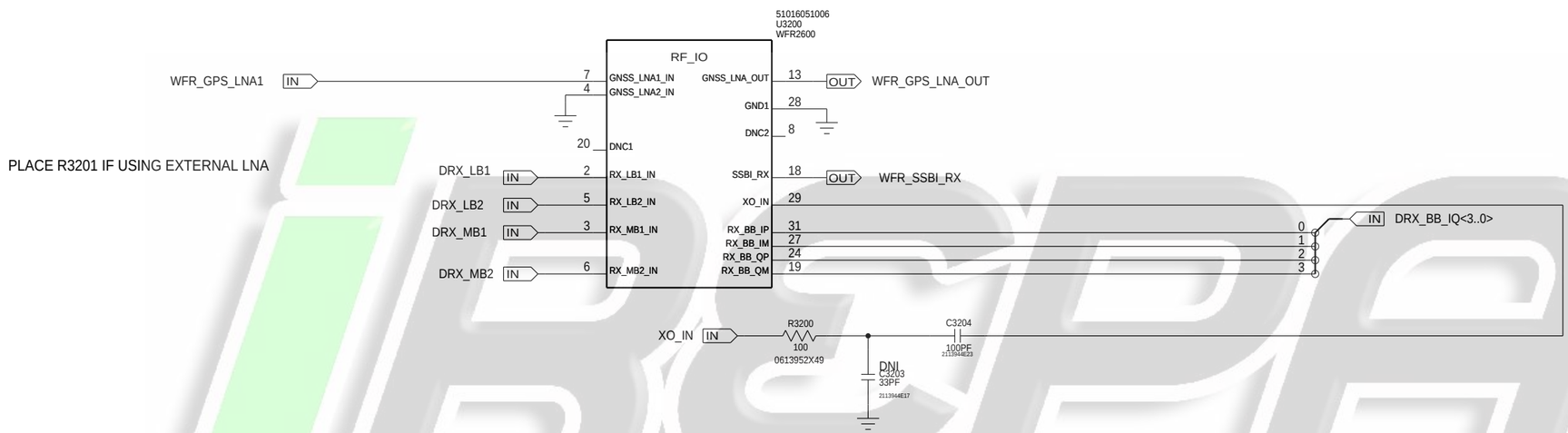

BASED ON 80-N5420-45 REV. C

APPROVALS	MOTOROLA MOBILE DEVICES
ENGINEER: GRAHAM ALVEY	BLOCK TITLE: block_wfr2600
LAST MODIFIED BY: Fri Aug 30 15:05:50 2013	
MOTOROLA CONFIDENTIAL RESTRICTED THE DRAWING ON THIS PRINT AND INFORMATION THEREWITH ARE PROPRIETARY TO MOTOROLA AND SHALL NOT BE USED OR DISCUSSED IN WHOLE OR IN PART WITHOUT MOTOROLA'S CONSENT. © COPYRIGHT, MOTOROLA. THIS DOES NOT IMPLY PUBLICATION	B — PROJECT NAME: 8226_ref_dsda.cpm — REV: 01
	CAD FILE NAME: — PAGE 31 OF 37

iRepair

WFR2600 POWER

REF 3300-3399

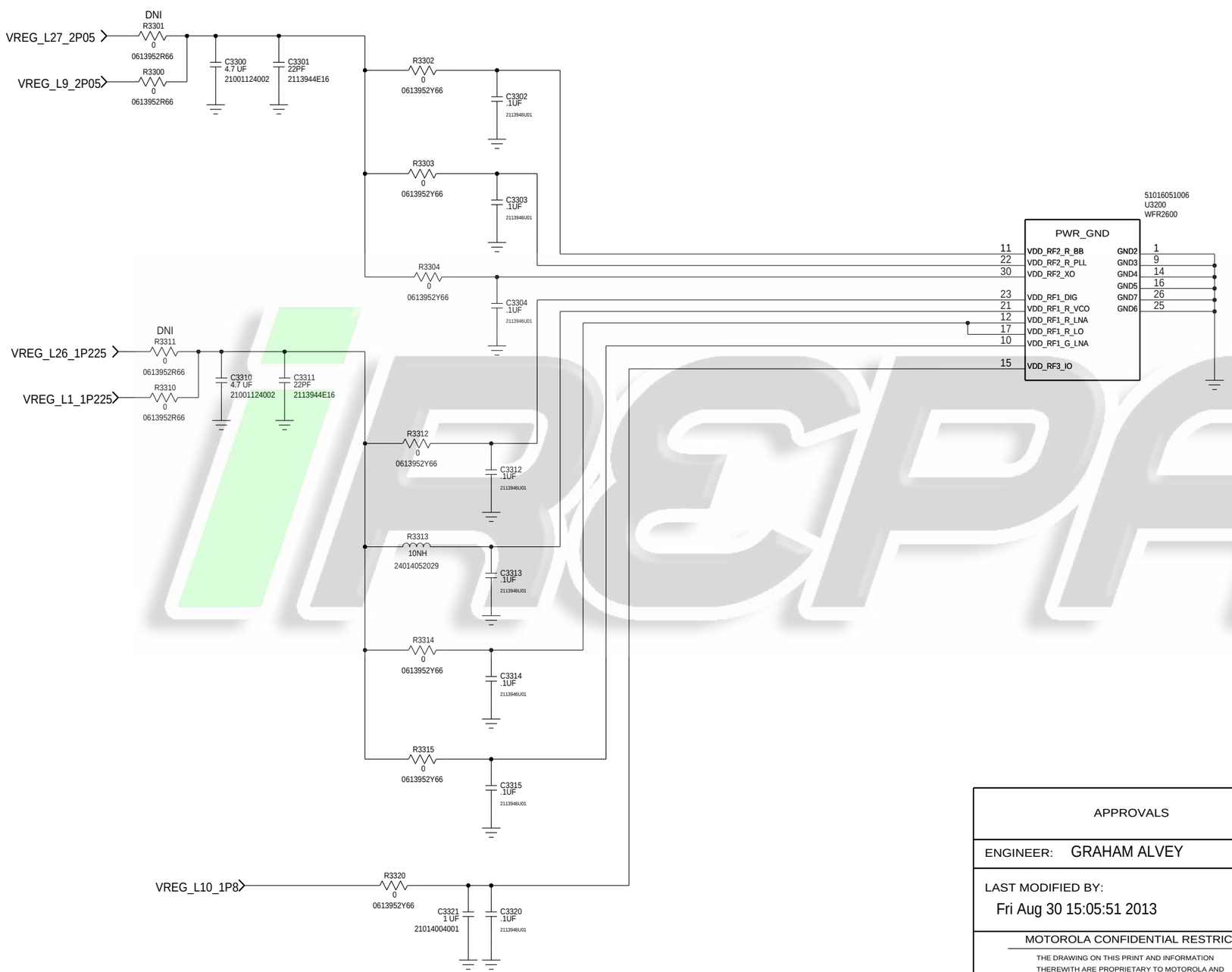

BASED ON 80-5420-45 REV. C

APPROVALS	MOTOROLA MOBILE DEVICES
ENGINEER: GRAHAM ALVEY	BLOCK TITLE: block_wfr2600
LAST MODIFIED BY: Fri Aug 30 15:05:51 2013	
MOTOROLA CONFIDENTIAL RESTRICTED	B — PROJECT NAME: 8226_ref_dsda.cpm — REV: 01
THE DRAWING ON THIS PRINT AND INFORMATION THEREWITH ARE PROPRIETARY TO MOTOROLA AND SHALL NOT BE USED OR DISCUSSED IN WHOLE OR IN PART WITHOUT MOTOROLA'S CONSENT.	CAD FILE NAME:
© COPYRIGHT, MOTOROLA. THIS DOES NOT IMPLY PUBLICATION	PAGE 32 OF 37

iRepair

RFFE:APT

REF 4500-4599

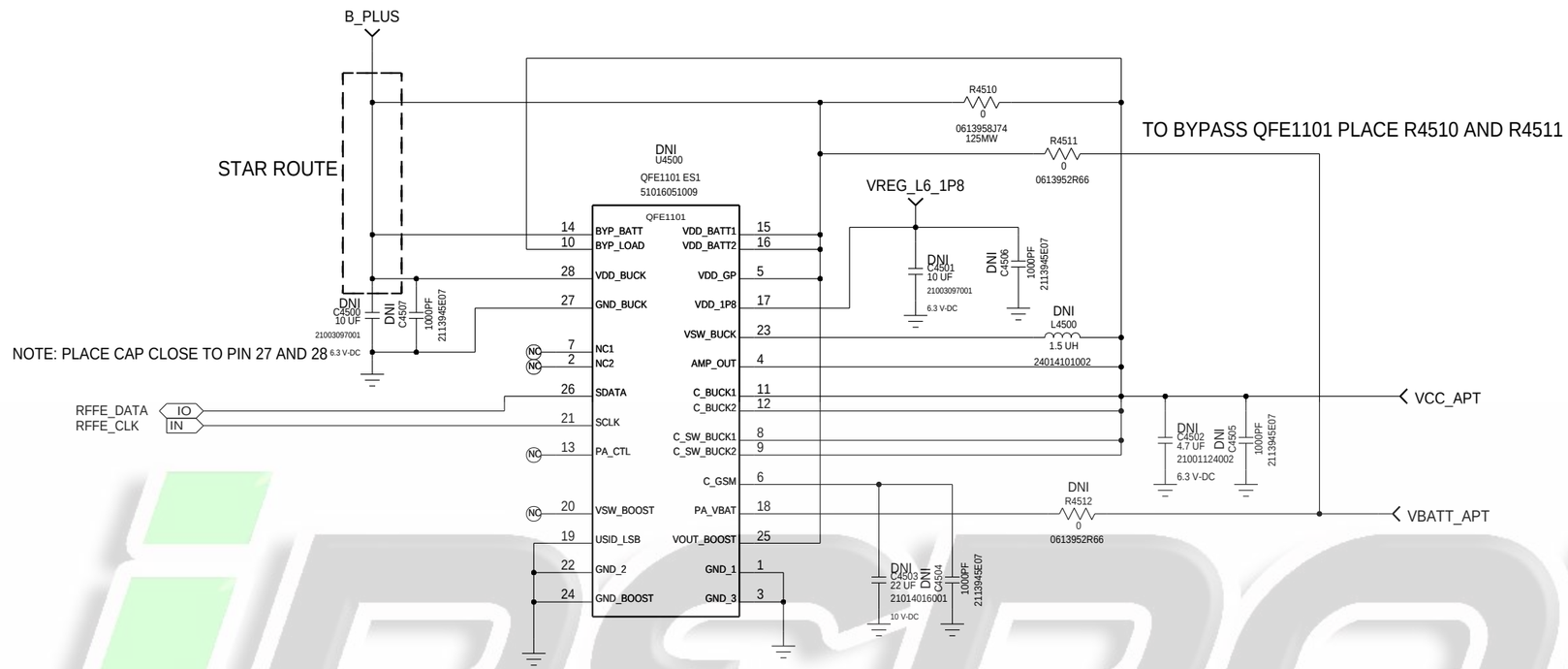

iREPAIR

APPROVALS	MOTOROLA MOBILE DEVICES
ENGINEER: GRAHAM ALVEY	BLOCK TITLE: block_rffe_dsda
LAST MODIFIED BY: Fri Aug 30 15:05:53 2013	
MOTOROLA CONFIDENTIAL RESTRICTED	B — PROJECT NAME: 8226_ref_dsda.cpm — REV: 01
THE DRAWING ON THIS PRINT AND INFORMATION THEREWITH ARE PROPRIETARY TO MOTOROLA AND SHALL NOT BE USED OR DISCUSSED IN WHOLE OR IN PART WITHOUT MOTOROLA'S CONSENT. © COPYRIGHT, MOTOROLA. THIS DOES NOT IMPLY PUBLICATION	CAD FILE NAME:

RFFE:TXM+GPS

REF 4000-4099

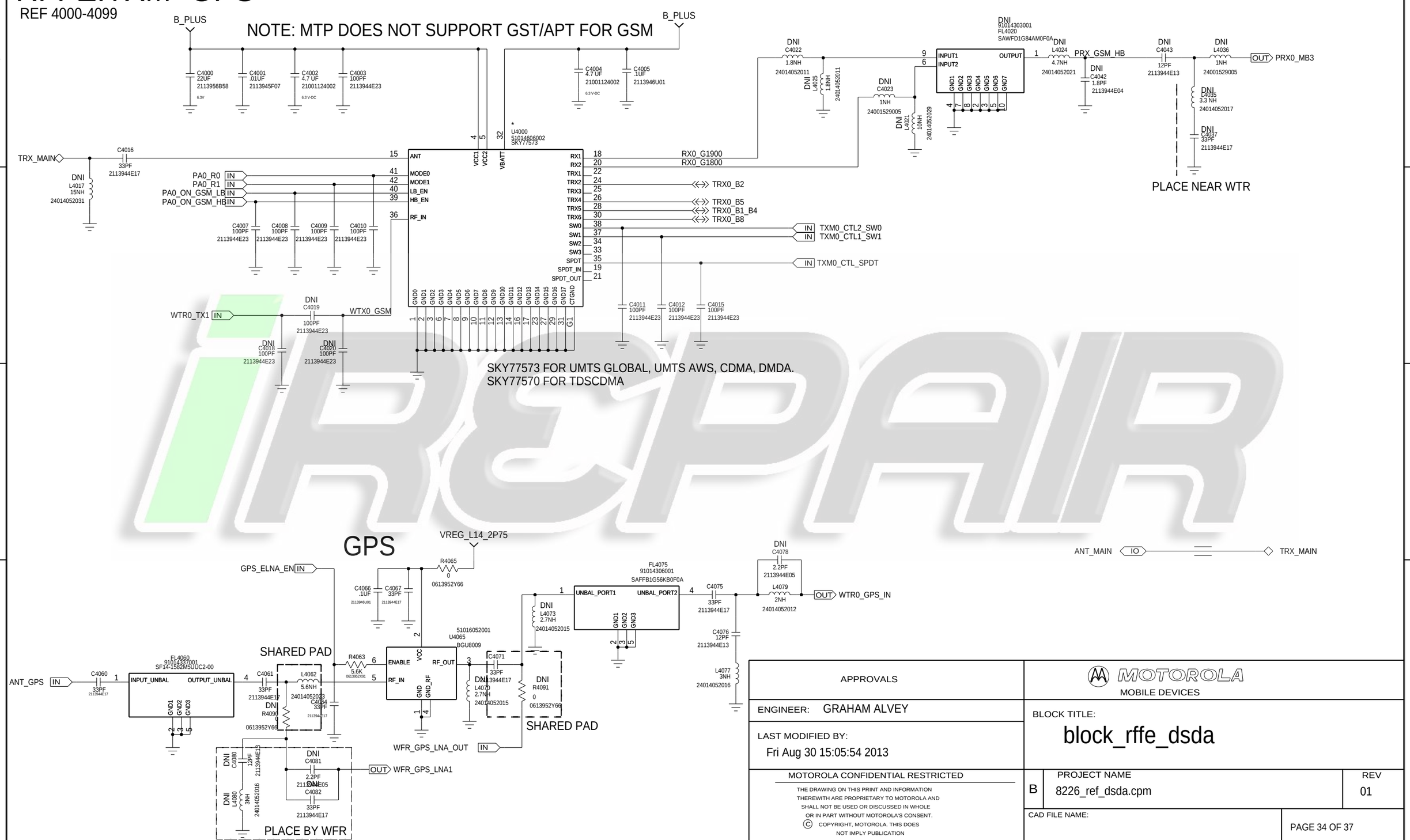

APPROVALS	MOTOROLA MOBILE DEVICES
ENGINEER: GRAHAM ALVEY	BLOCK TITLE: block_rffe_dsda
LAST MODIFIED BY: Fri Aug 30 15:05:54 2013	
MOTOROLA CONFIDENTIAL RESTRICTED	B — PROJECT NAME: 8226_ref_dsda.cpm — REV: 01
THE DRAWING ON THIS PRINT AND INFORMATION THEREWITH ARE PROPRIETARY TO MOTOROLA AND SHALL NOT BE USED OR DISCUSSED IN WHOLE OR IN PART WITHOUT MOTOROLA'S CONSENT. © COPYRIGHT, MOTOROLA. THIS DOES NOT IMPLY PUBLICATION	CAD FILE NAME:
	PAGE 34 OF 37

iREPAIR

RFFE:B2/B5

REF 4200-4299

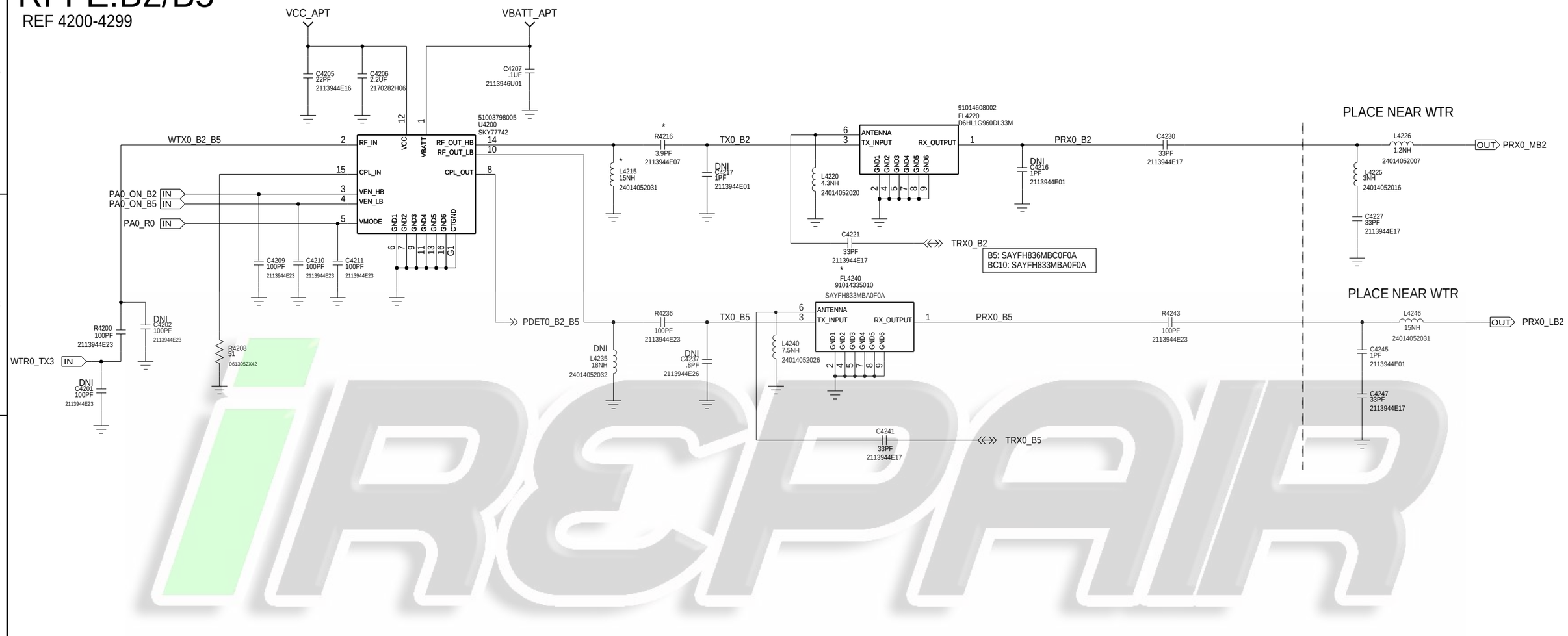

iREPAIR

APPROVALS	MOTOROLA MOBILE DEVICES
ENGINEER: GRAHAM ALVEY	BLOCK TITLE: block_rffe_dsda
LAST MODIFIED BY: Fri Aug 30 15:05:56 2013	
MOTOROLA CONFIDENTIAL RESTRICTED	B — PROJECT NAME: 8226_ref_dsda.cpm — REV: 01
THE DRAWING ON THIS PRINT AND INFORMATION THEREWITH ARE PROPRIETARY TO MOTOROLA AND SHALL NOT BE USED OR DISCUSSED IN WHOLE OR IN PART WITHOUT MOTOROLA'S CONSENT. © COPYRIGHT, MOTOROLA. THIS DOES NOT IMPLY PUBLICATION	CAD FILE NAME: — PAGE 35 OF 37

RFFE:B1/B8+B4

REF 4300-4399

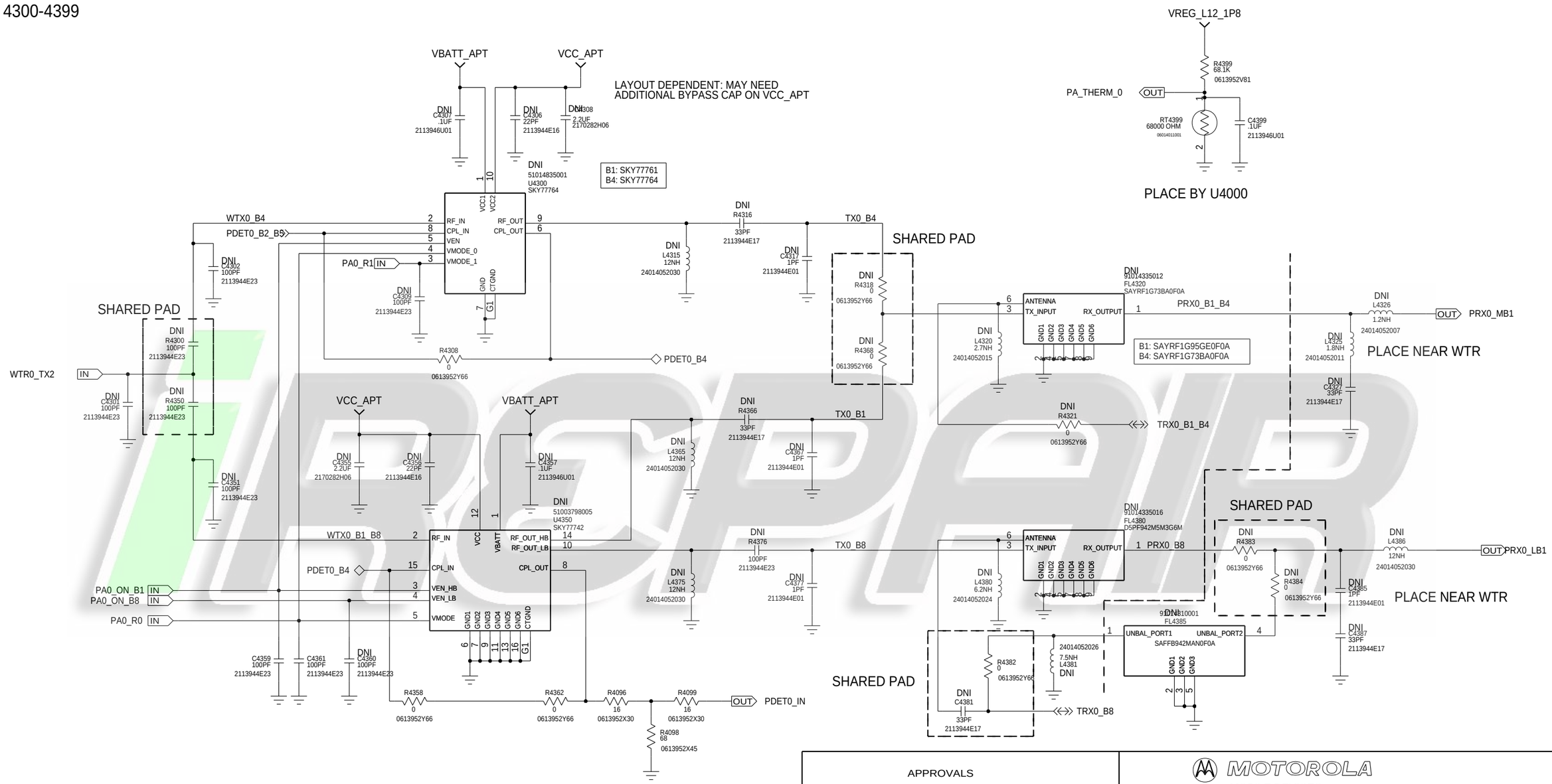

VARIANT	R4308	R4309	R4358	R4362
UMTS GLOBAL	0 OHM	DNI	DNI	DNI
UMTS AWS	DNI	DNI	0 OHM	0 OHM
CDMA	DNI	DNI	0 OHM	0 OHM

APPROVALS

ENGINEER: GRAHAM ALVEY

LAST MODIFIED BY: Fri Aug 30 15:05:57 2013

MOTOROLA CONFIDENTIAL RESTRICTED

THE DRAWING ON THIS PRINT AND INFORMATION THEREWITH ARE PROPRIETARY TO MOTOROLA AND SHALL NOT BE USED OR DISCUSSED IN WHOLE OR IN PART WITHOUT MOTOROLA'S CONSENT.
© COPYRIGHT, MOTOROLA. THIS DOES NOT IMPLY PUBLICATION

MOTOROLA MOBILE DEVICES

BLOCK TITLE: block_rffe_dsda

	PROJECT NAME	REV
B	8226_ref_dsda.cpm	01

CAD FILE NAME:

RFFE:DIVERSITY

REF 4800-4899

WFR DIVERSITY - B1/B2/B5/B8

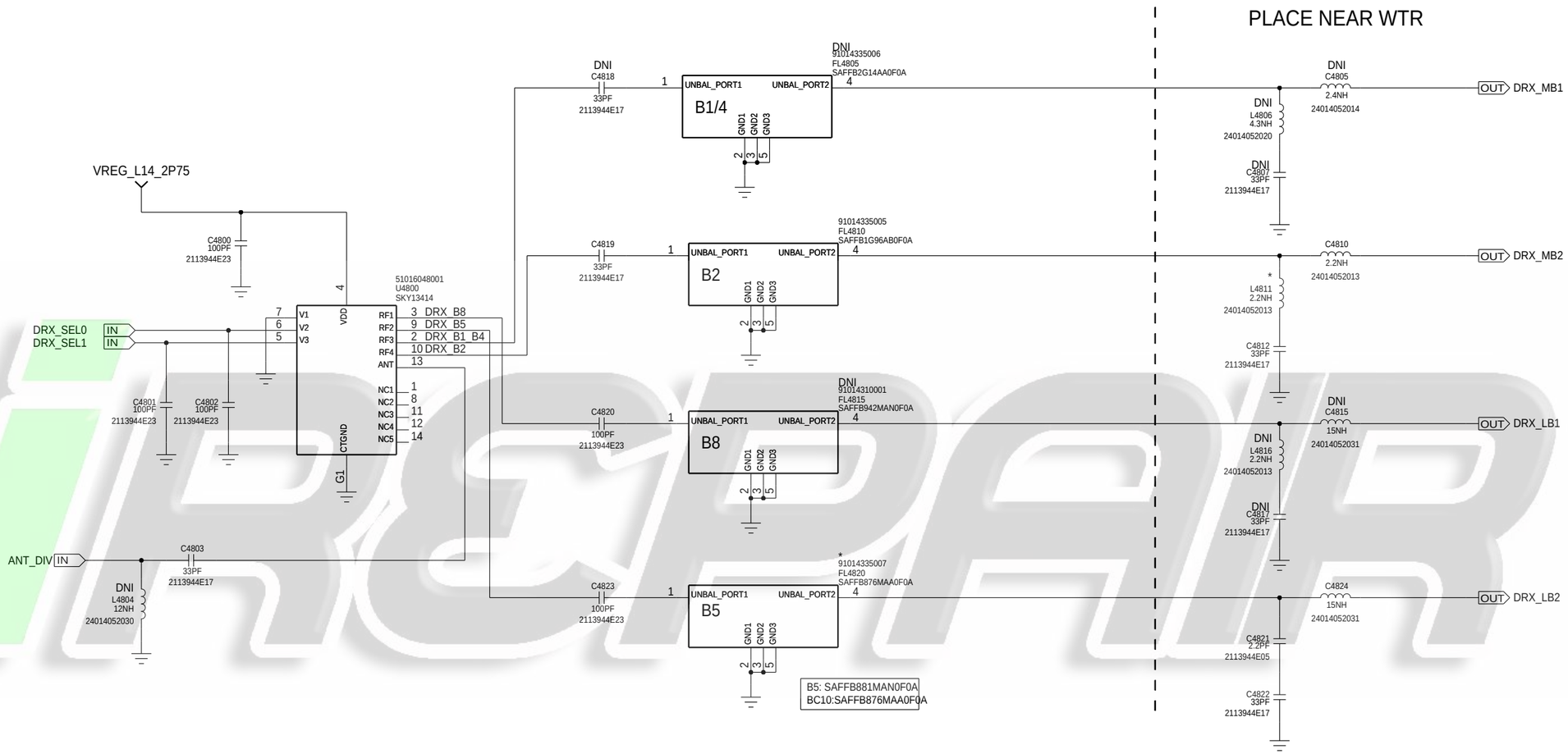

APPROVALS	MOTOROLA MOBILE DEVICES
ENGINEER: GRAHAM ALVEY	BLOCK TITLE: block_rffe_dsda
LAST MODIFIED BY: Fri Aug 30 15:05:58 2013	
MOTOROLA CONFIDENTIAL RESTRICTED	B — PROJECT NAME: 8226_ref_dsda.cpm — REV: 01
THE DRAWING ON THIS PRINT AND INFORMATION THEREWITH ARE PROPRIETARY TO MOTOROLA AND SHALL NOT BE USED OR DISCUSSED IN WHOLE OR IN PART WITHOUT MOTOROLA'S CONSENT. © COPYRIGHT, MOTOROLA. THIS DOES NOT IMPLY PUBLICATION	CAD FILE NAME:
	PAGE 37 OF 37